Leuze

Product overview
2021/2022

The Sensor People

Send Quote Requests to info@automatedpt.com
Call +1(800)985-6929 to talk to an expert

Our range of products and services

Creating transformation
Yesterday. Today. Tomorrow.

With curiosity and determination, we – the Sensor People – have been partners for technological milestones in industrial automation for more than 50 years. The success of our customers is what drives us. Yesterday. Today. Tomorrow.

Send Quote Requests to info@automatedpt.com
Call +1(800)985-6929 to talk to an expert

Our company
Everything at a glance

In a constantly changing industrial world, we work together with our customers to find the best solution for their sensor applications: innovatively, precisely and efficiently.

Key figures

Foundation	1963
Company structure	GmbH + Co. KG, wholly family-owned
Executive management	Ulrich Balbach
Headquarters	Owen, Germany
Subsidiaries	21
Production locations	5
Technological competence centers	3
Distributors	40
Employees	> 1,200

Product range

- Switching sensors
- Measuring sensors
- Safety
- Identification
- Data transmission systems
- Network and connection technology
- Industrial image processing
- Accessories and supplementary products

Focus industries

- Intralogistics
- Packaging industry
- Machine tools
- Automotive industry
- Laboratory automation

Leuze electronic GmbH + Co. KG

In der Braike 1
73277 Owen
Phone: +49 7021 573-0
Fax: +49 7021 573-199
E-mail: info@leuze.com
www.leuze.com

Our Locations
At work for you around the world

Your success is our motivation. We therefore place great value on always being personally, quickly, and easily accessible to you. We produce on four continents, allowing us to offer you reliable product availability.

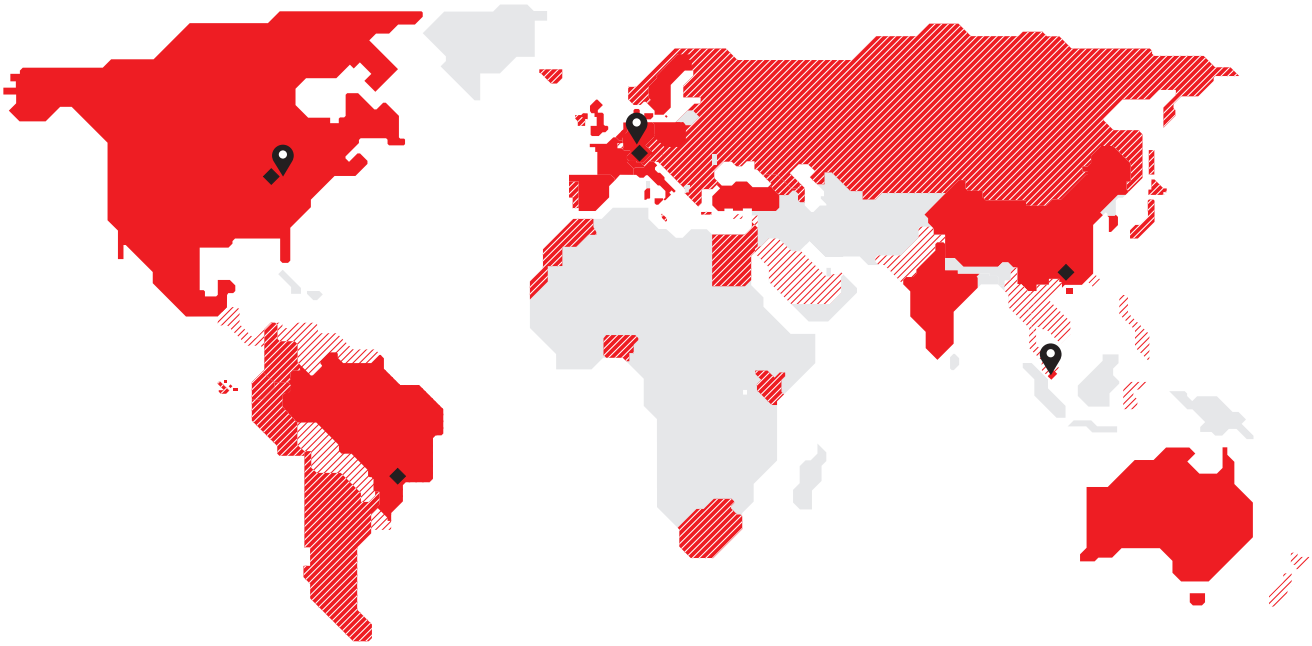

- Technological competence centers
- Production locations
- Subsidiaries
- Distributor
- Distribution through neighboring country

Technological competence centers

Owen, Germany
New Hudson / Detroit, USA
Singapore

Production locations

Owen, Germany
Unterstadion, Germany
New Hudson / Detroit, USA
Shenzhen, China
São Paulo, Brazil

Distribution companies

Australia / New Zealand
Belgium
Brazil
China
Denmark / Sweden
France
Germany – headquarters
Germany – distribution company
Great Britain
Hong Kong
India
Italy
Mexico
Poland
Singapore
South Korea
Spain
Switzerland
The Netherlands
Turkey
USA / Canada

Switching sensors

Dependable switching: All objects and packaging are detected stably and reliably

Using various operating principles and technologies, switching sensors detect objects reliably – at either the start or end point of the application.

We offer a variety of sensors that detect an object optoelectronically, with ultrasonics, inductively or capacitively and output a stable switching signal.
We meet the diverse requirements from the production and packaging industry with a large number of different light spots, operating principles, designs and sizes.

The usability when aligning and adjusting the switching point is simple and intuitive for all models. The sensors output standardized switching signals, NPN/PNP as well as IO-Link data and can, thus, be integrated in all applications. Many series offer helpful additional functions to facilitate service intervals that are as long as possible.

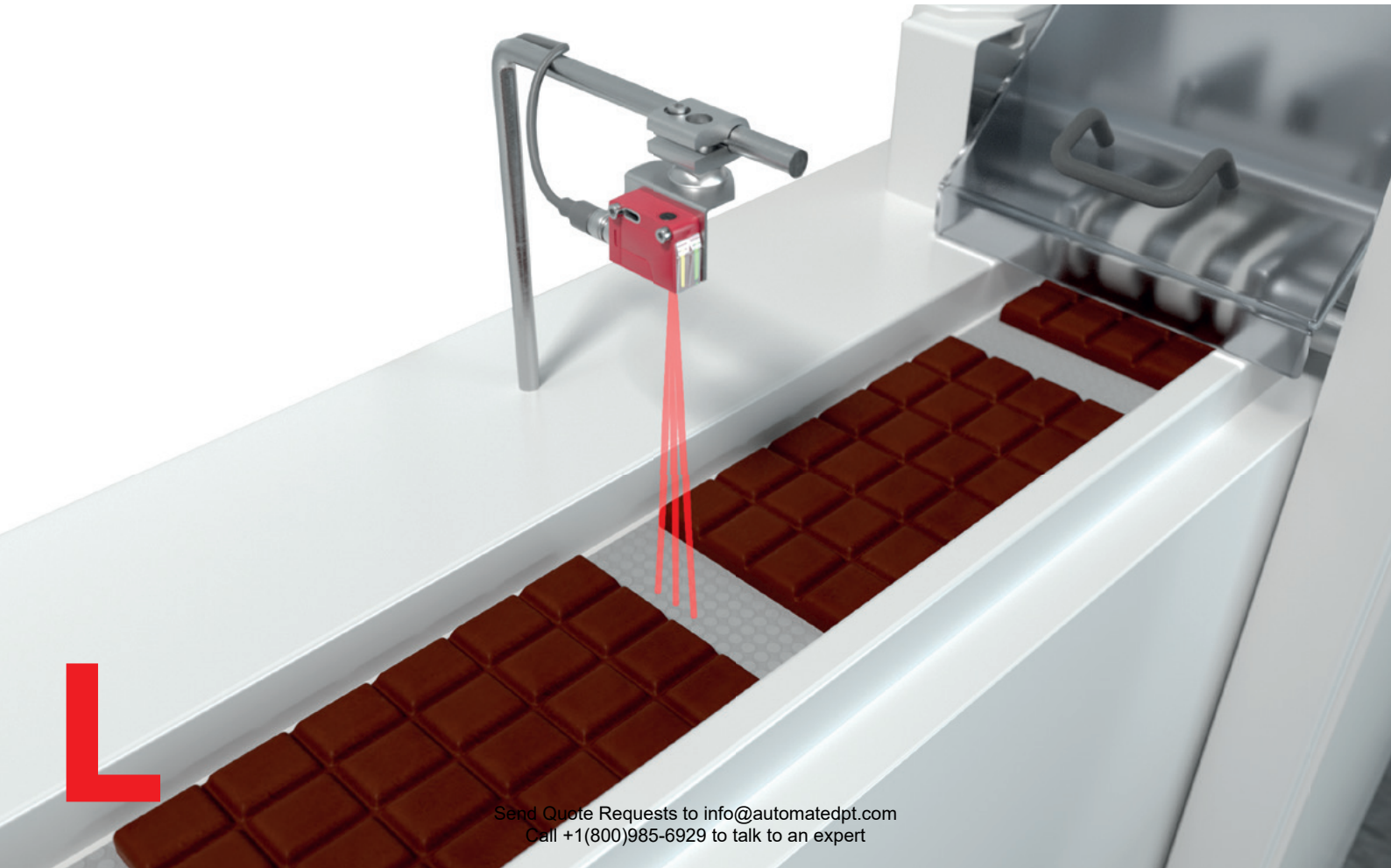

Reliable detection of confectionery and baked goods without readjustment when changing objects

The DRT 25C dynamic reference diffuse sensor – an innovative new product from Leuze – is specially designed for the detection of confectionery and baked goods.

Thanks to intelligent CAT technology it reliably recognizes flat and spherical products, transparent to high-gloss films as well as irregular shapes and contours.

DRT 25C

- The reliable detection of objects even with difficult shapes and surfaces ensures continuous machine output and prevents downtime
- No adjustment of the sensor is needed when products or packaging materials are changed, shorter setup times enable higher production quantities
- Fast and easy setup of the sensor through automatic teaching of the belt surface using the teach button; just one universal mounting position for all objects
- Reliable operation even if the conveyor belt is soiled or vibrating
- IO-Link for easy integration of additional functions in the machine control, such as warning message in case of excessive contamination, use of the counter built into the sensor, or locking of the teach button

Switching sensors

Photoel. sensors / diffuse sensors, cubic housing

		2 series Universal, micro	**23 series** Standard	**3C series** Universal, mini
Specifications	Dimensions excl. connector, W × D × H	8 × 23 × 12 mm	11 × 32 × 17 mm	11 × 32 × 17 mm
	Operating voltage	10–30 V DC	10–30 V DC	10–30 V DC
	Switching outputs	PNP, NPN	PNP, NPN	Push-pull, PNP, NPN, IO-Link
	Connection type	Cable, cable+M8 / M12	M8, cable, cable+M8 / M12	M8, cable, cable+M8 / M12
	Degree of protection	IP 67	IP 67	IP 67, IP 69K
	Certifications	CE c UL us	CE c UL us	CE CDRH c UL us
	Housing	Thermoelastic elastomer	Plastic	Plastic
Throughbeam photoelectric sensors	Operating range*	0–2 m	0–8 m	0–10 m
	Light source	Red light	Red light	Red light / laser (class 1)
	Switching	Light, dark	PNP, NPN	Light, dark, antivalent
	Switching frequency	385 Hz	500 Hz	1,000 / 3,000 Hz
Retroreflective photoelectric sensors	Operating range*	0.07–4 m	0.1–4.5 m	0–7 / 0.02–5.5 / 0–3 m
	Light source	Red light	Red light	Red light / infrared / laser (class 1)
	Switching	Light, dark	PNP, NPN	Light, dark, antivalent
	Switching frequency	700 Hz	500 Hz	1,000 / 1,500 / 3,000 Hz
Energetic diffuse sensor	Operating range*		0...0.56 m	
	Light source		Red light	
	Switching		PNP, NPN	
	Switching frequency		500 Hz	
Diffuse sensors with background suppression	Operating range*	Permanently set to 15 mm, 30 mm, 50 mm	0–400 mm	5–600 mm
	Light source	Red light	Red light	Red light / laser (class 1)
	Switching	Light, dark	PNP, NPN	Light, dark, antivalent
	Switching frequency	700 Hz	1,000 Hz	1,000 / 3,000 Hz
Dynamic reference diffuse sensor	Operating range*			
	Light source			
	Switching			
	Switching frequency			
Additional functions	Transparent media			X
	Protective sensors category 2/4			
	Warning output			X
	Activation input			X
	Active ambient light suppression A^2LS			X
Properties		Powerful interference suppression | 2 inlaid metal sleeves | Sensor with a laser-like light spot	The diffuse sensor is intuitively operated via multiturn potentiometer | Indicator LEDs with all-round visibility | Switching output with either PNP or NPN design	ECOLAB | 2 housings: through holes with metal sleeves or threaded sleeves | Sensor with different light-spot geometry and V-configuration | Laser variants | Teach-in | Bottle detection | Contrast sensors | Detection of labels on bottles | Devices with IO-Link communication interface | Teach button with remote function

* Typical operating range limit




5 series Standard	**28 series** Standard, multimount	**15 series** Standard	**25C series** Universal
14 × 32.5 × 20.2 mm	15 × 47 × 32 mm	15 × 42.7 × 30 mm	15 × 42.7 × 30 mm
10–30 V DC	10–30 V DC	10–30 V DC	10–30 V DC
PNP, NPN	PNP, NPN	PNP, NPN	PNP, NPN, push-pull, IO-Link
M8, cable, cable+M8 / M12	M12, cable, cable+M12	M8, M12, cable, cable+M12	M8 / M8+snap / M12, cable, cable+M8 / M12
IP 67	IP 67	IP 66, IP 67	IP 67, IP 69K
CE c UL us	CE c UL us	CE c UL us	CE CDRH c UL us
Plastic	Plastic	Plastic	Plastic
0–15 m	0–15 m	0–30 m	0–30 / 0–800 m (radiation through films)
Red light, infrared	Red light, infrared	Red light	Red light, infrared
Antivalent	Antivalent	Light, dark	Light, dark
500 Hz	500 Hz	500 Hz	1,500 Hz
0.02–6 m	0.02–6 m	0–8 / 0–10 m	0–10 / 0–12 / 0–25 m
Red light	Red light	Red light	Red light / laser (class 1 and 2)
Antivalent	Antivalent	Light, dark	Light, dark, antivalent
500 Hz	500 Hz	500 Hz	1,500 / 2,500 Hz
0–1 m	0–0.85 m		
Red light / infrared	Red light		
Antivalent	Antivalent		
500 Hz	500 Hz		
0–400 mm		0–1,000 mm	0–1,200 / 0–1,300 mm
Red light		Red light / infrared	Red light / infrared / laser (class 1 and 2)
Light, dark		Light, dark	Light, dark, antivalent
1,000 Hz		500 Hz	1,000 / 2,500 Hz
			200 mm
			Red light
			Push-pull
			750 Hz
X			X
			X (type 2)
			X
X	X	X	X
X	X	X	X
Simple mounting by means of integrated threaded sleeves | Flexible cable outlet to the rear or downward | Fast alignment through *bright*vision | Detection of semi-transparent media | Teach variants available | Detection of empty bottles	Universal front- and plug-side M18-hole mounting option | Easy through-hole assembly with anti-rotation protection for mounting nuts on the housing | Fast alignment through *bright*vision	Mechanically adjustable operating range | Sensitivity adjustment | Retro-reflective sensor with large function reserve / for stretch-wrapped containers	ECOLAB, M4 metal threaded sleeves, sensors with small and long light spot | Sensor for bay positioning / for the detection of broken containers | Focused light spot | Foreground suppression | High function reserve | For stretch-wrapped packages | Bottle detection | Laser variants | Teach-in | Dynamic reference diffuse sensor | Long-range sensor | IO-Link interface | Safety-vest sensor | Throughbeam photo-electric sensor with extremely high light power

Photoel. sensors / diffuse sensors, cubic housing

				
		46C series Universal, long range	**49C series** Universal current	**55 series** Stainless steel, Wash-Down design
Specifications	Dimensions excl. connector, W × D × H	20.5 × 76.3 × 44 mm	31 × 104 × 55.5 mm	14 × 36 × 25 mm
	Operating voltage	10–30 V DC	10–30 V DC / 20–250 V AC/DC	10–30 V DC
	Switching outputs	PNP, NPN, push-pull	PNP, NPN, relay, MOSFET	Push-pull, PNP
	Connection type	M12, cable, cable+M12	Cable, terminals	M8, cable+M12, cable
	Degree of protection	IP 67, IP 69K	IP 67, IP 69K	IP 67, IP 69K
	Certifications	CE CDRH c UL us	CE CDRH c UL us	CE CDRH c UL us
	Housing	Plastic	Plastic	Stainless steel 316L
Throughbeam photoelectric sensors	Operating range*	0–150 m	0–150 m	0–10 m
	Light source	Red light / infrared	Red light / infrared	Red light / infrared
	Switching	Light, dark, antivalent	Light, dark, antivalent	Antivalent
	Switching frequency	100 / 500 Hz	25 / 150 / 500 Hz	1,000 Hz
Retroreflective photoelectric sensors	Operating range*	0.05–30 m	0.05–30 m	0–6 / 0–3 m
	Light source	Red light	Red light	Red light / laser (class 1)
	Switching	Light, dark, antivalent	Light, dark, antivalent	Antivalent
	Switching frequency	25 / 150 / 500 Hz	25 / 150 / 500 Hz	1,000 / 2,000 Hz
Energetic diffuse sensor	Operating range*			
	Light source			
	Switching			
	Switching frequency			
Diffuse sensors with background suppression	Operating range*	5–3,000 mm	5–3,000 mm	5–600 mm
	Light source	Red light / infrared / red light laser (class 1/2)	Red light / infrared	Red light / infrared / laser (class 1)
	Switching	Light, dark, antivalent	Light, dark, antivalent	Antivalent
	Switching frequency	20 / 100 / 200 / 250 / 500 Hz	25 / 150 / 250 Hz	1,000 / 2,000 Hz
Additional functions	Transparent media			X
	Protective sensors category 2/4	X		
	Warning output	X	X	
	Activation input	X	X	X
	Active ambient light suppression *A*²LS	X	X	X
Properties		Retro-reflective photoelectric sensor with light-band for objects with openings / irregular shape | Detection of tubular bags on a conveyor belt | Can be used as muting sensor | Roller conveyor sensor | Models for dusty environments | Optimized for parallel operation | Extreme background suppression | Devices with IO-Link interface	Photoelectric sensors with a particularly high function reserve | Optional time function and optics heating | Terminal compartment accessible from front | Spring terminals | Relay switching output for high loads	Wash-Down design | CleanProof+ | ECOLAB | Foil detection < 20 µm | Bottle detection | Contrast sensors | Versions for Ex zone 2 and 22 | Model for detecting aqueous liquids in containers | Models with extra long light spot (XL) | Models with small light spot (S)

* Typical operating range limit

			
53 series Stainless steel, Hygiene design	**18B series** Metal, detection of transparent objects	**8 series** Metal	**96 series** Metal, long range
14 × 54 × 20 mm	15 × 47 × 32.5 mm	15 × 48 × 38 mm	30 × 90 × 70 mm
10–30 V DC	10–30 V DC	10–30 V DC	18–30 V DC / 20–230 V AC/DC
Push-pull, PNP	PNP, NPN, analog	PNP, NPN, push-pull	PNP, NPN, push-pull, relay
M8, cable	M12, cable	M12, cable	M12, terminals
IP 67, IP 69K	IP 67, IP 69K	IP 67, IP 69K	IP 67, IP 69K
CE CDRH c UL us	CE c UL us	CE CDRH c UL us	CE CDRH c UL us
Stainless steel 316L	Metal	Metal, glass	Metal
0–10 m		0–20 / 0–100 m	0–39 / 0–150 m
Red light		Red light / laser (class 2)	Red light / infrared
Antivalent		Light, dark, antivalent	Light, dark, antivalent
1,000 Hz		1,500 / 2,800 Hz	500 Hz
0–5 / 0–3 m	0–6 m	0–8 / 0–21 m	0–28 / 0.1–18 m
Red light / laser (class 1)	Red light	Red light / laser (class 1)	Red light / infrared
Antivalent	Light, dark, antivalent	Light, dark, antivalent	Light, dark, antivalent
1,000 / 2,000 Hz	5,000 / 1,500 Hz	1,500 / 2,800 Hz	1,000 Hz
			30–700 / 20–1,200 mm
			Red light / infrared
			Light, antivalent
			1,000 Hz / 20 Hz
5–600 mm		5–400 mm	100–1,200 / 10–2,500 / 50–6,500 / 12,000 / 25,000 mm
Red light / infrared / laser (class 1)		Red light / infrared / laser (class 1/2)	Red light / infrared / red light laser (class 1/2) / infrared laser (class 1)
Antivalent		Light, antivalent	Light, dark, antivalent
1,000 / 2,000 Hz		1,000 / 1,000 / 2,000 Hz	300 / 10 Hz
X	X	X	X
			X
	X	X	X
X			X
X	X	X	X
Hygiene design | CleanProof+ | ECOLAB, EHEDG | Foil detection <20 µm | Bottle detection | Model with extra long light spot for front edge detection | Models with small light spot | Models with V-optics and extremely long light spot for the detection of top layers	Bottle detection | Foil detection <20 µm | Target mark detection | Aligned optics | Tracking | EasyTune | User guidance | Trigger function with reduced signal jitter | IO-Link interface | Contrast sensors	Luminescence sensors | Foreground suppression | Turnable connector | Film detection | Bottle detection | ECOLAB	Optics heating | Switching delay | Up to 3 switching points | Deactivation | L/D switching | Mechanically adjustable operating range | Teach-in | Versions for Ex zones 2 and 22 / with window function / for collision protection / feed-through monitoring

Photoel. sensors / diffuse sensors, cylindrical housing

		 **412B series** M12, cylindrical	 **618 series** M18, cylindrical	 **318(B) series, 328 series** M18, cylindrical
Specifications	Dimensions excl. connector, W × D × H	M12 × 50 mm, M12 × 60 mm (with connector)	M18 × 46 mm, M18 × 60 mm	M18 × 46 mm, M18 × 60 mm
	Operating voltage	10–30 V DC	10–30 V DC	10–30 V DC
	Switching outputs	PNP, NPN	PNP, NPN, push-pull	PNP, NPN, push-pull
	Connection type	M12, cable	M12, cable	M12, cable
	Degree of protection	IP 67	IP 67	IP 67
	Certifications	CE c UL us	CE	CE CDRH c UL us
	Housing	Metal, stainless steel V2A	Full metal, stainless steel, plastic	Full metal, stainless steel, plastic
Throughbeam photoelectric sensors	Operating range*	0–10 m / 0–50 m	0–15 / 0–23 / 0–120 m	0–15 / 0–23 / 0–120 m
	Light source	Red light / laser (class 2)	Red light / infrared / laser (class 1)	Red light / infrared / laser (class 1)
	Switching	Light, dark	Light, dark, antivalent	Light, dark, antivalent
	Switching frequency	1,000 / 5,000 Hz	500 / 1,000 / 5,000 Hz	500 / 1,000 / 5,000 Hz
Retroreflective photoelectric sensors	Operating range*	0.02–1.8 m	0–7 / 0.02–6 / 0.1–15 m	0–7 / 0.02–6 / 0.1–15 m
	Light source	Red light	Red light / laser (class 1)	Red light / laser (class 1)
	Switching	Light, dark	Light, dark, antivalent	Light, dark, antivalent
	Switching frequency	1,000 Hz	500 / 5,000 Hz	500 / 5,000 Hz
Energetic diffuse sensor	Operating range*	0–540 mm	0–140 / 0–1,000 / 0–300 / 0–280 mm	0–140 / 0–1,000 / 0–300 / 0–280 mm
	Light source	Red light	Red light / infrared / laser	Red light / infrared / laser
	Switching	Light, dark	Light, dark, antivalent	Light, dark, antivalent
	Switching frequency	1,000 Hz	500 / 1,000 / 5,000 Hz	500 / 1,000 / 5,000 Hz
Diffuse sensors with background suppression	Operating range*		1–140 mm	1–140 mm
	Light source		Red light	Red light
	Switching		Antivalent	Antivalent
	Switching frequency		1,000 Hz	1,000 Hz
Additional functions	Transparent media		X	X
	Protective sensors category 2		X	X
	Warning output			
	Activation input		X	X
	Deactivation input	X		X
	Active ambient light suppression ***A***²LS		X	X
Properties		360° 4-hole LED for models with M12 connector	Bracket versions | Simple alignment with omni-mount | Embedded mounting option | Models with M18 stainless steel sleeve and full-metal version | Variant available with preset range and as label sensor	Bracket versions | Simple alignment with omni-mount | Embedded mounting option | Models with M18 stainless steel sleeve and full-metal version | Variant available with preset range and as label sensor

* Typical operating range limit

Long-range sensors



		25 LR series TOF, long range	**110 series** TOF, long range laser	**10 series** TOF, long range laser
Specifications	Dimensions excl. connector, W × D × H	15 × 38.9 × 28.7 mm	50 × 23 × 50 mm	25 × 65 × 55 mm
	Operating voltage	10 – 30 V DC	18 – 30 V DC	18 – 30 V DC
	Switching outputs	PNP, NPN, push-pull, IO-Link	Push-pull, IO-Link	Push-pull, IO-Link
	Connection type	Cable+M12	Turnable M12 connector	Cable+M12, cable, turnable M12 connector
	Degree of protection	IP 67	IP 67, IP 69K	IP 67
	Certifications	CE CDRH c UL us	CE CDRH c UL us	CE CDRH c UL us
	Housing	Plastic	PMMA	Plastic
Diffuse sensors with background suppression	Operating range*	50 – 3,000 mm	100 – 5,000 mm (WH) / 3,000 mm (BK)	50 – 8,000 mm / 25,000 mm
	Light source	Infrared TOF (light propagation time measurement)	Laser, red, 655 nm (class 1)	Red light laser (class 1)
	Switching	Light, dark	Light	Light
	Switching frequency	30 / 40 Hz	250 Hz	40 Hz
Additional functions	Transparent media			
	Protective sensors category 2 / 4			
	Warning output	X		X
	Activation input	X	X	X
	Active ambient light suppression ***A***²LS			X
Properties		Detection of objects with low diffuse reflection > 4% | 2 teachable switching points (TOF) | Line teach and deactivation | All devices with IO-Link interface for configuration (including adaptation to the application) and process data transfer | Very good fading | Operating range adjustment via IO-Link	All devices with IO-Link interface | Turnable M12 connector | 2 switching points | Small black-white error | High repeatability | Adjustment via teach buttons | Propagation time of the radiated light (TOF)	Turnable M12 connector | All devices with IO-Link interface | Light/dark switching via teach button | Window function | Adaptation to the application by means of configurable filters and gain values | Propagation time of the radiated light (TOF)

Inductive switches

IS 203, 204, 205, 206
Miniature sensors, cylindrical housing

Specifications	Dimensions incl. connector, W × D × H	Ø 3.0: 22 mm Ø 4.0: 25 mm M5: 25 – 38 mm Ø 6.5: 35 – 65 mm
	Type of installation	Embedded / non-embedded
	Operating voltage	10 – 30 V DC
	Operating range	1 – 3 mm
	Switching outputs	PNP
	Switching principle	NO, NC
	Switching frequency	Up to 5,000 Hz
	Connection type	M8, cable + M8, cable
	Degree of protection	IP 67
	Certifications	CE c UL us
	Housing	Stainless steel (V2A)
Properties		Cylindrical miniature housing | Versions with increased operating range




IS 208, 212, 218, 230 Standard, cylindrical	**IS 208, 212, 218, 230** All stainless steel	**IS 255, 288** Miniature sensors, cubic housing	**IS 240, 244 / ISS 244** Standard, cubic
M8: 22–45 mm M12: 35–60 mm M18: 35–64 mm M30: 40.6–73.5 mm	M8: 45–60 mm M12: 50–60 mm M18: 51–63.5 mm M30: 50–63.5 mm	5 × 5 × 25 mm 8 × 8 × 40 mm 8 × 8 × 59 mm	12 × 40 × 26 mm 40 × 40 × 67 mm 40 × 40 × 118 mm
Embedded / non-embedded	Embedded / non-embedded	Embedded	Embedded / non-embedded
10–30 V DC	10–30 V DC	10–30 V DC	10–30 V DC
2–40 mm	2–40 mm	1.5–3 mm	4–40 mm
PNP, NPN	PNP, NPN	PNP, NPN	PNP, NPN
NO, NC, NO + NC (antivalent)	NO, NC	NO, NC	NO + NC (antivalent)
Up to 5,000 Hz	Up to 600 Hz	Up to 5,000 Hz	Up to 1,400 Hz
M12, cable + M12, cable	M8, M12, cable	M8, cable + M8, cable	M8, M12, terminal, cable
IP 67	IP 67, IP 68, IP 69 K	IP 67	IP 67, IP 68, IP 69 K
CE c UL us	CE c UL us	CE c UL us	CE c UL us
Metal	All stainless steel (V2A & V4A)	Metal	Plastic
Different versions available: | Short housing design | Increased range | AC/DC device versions | Antivalent switching output	Full stainless steel housing from a single piece (V2A & V4A) | Resistant against vibration and pressure shocks | Mechanically resistant against impacts on the active surface | Also available as a model with 316L stainless steel (ECOLAB) suitable for use in hygienic applications | Correction factor 1 (material-independent detection)	Cubic miniature housing | Versions with increased operating range	Bright status display | Antivalent switching outputs (NO+NC) | Increased ranges | M12 plug, turnable 270° and thus suitable even for angled connection cables | 360° visibility through 4-way LED indicator on the sensor head

Capacitive sensors

		LCS-1 Capacitive sensors, cylindrical	**LCS-1** Capacitive sensors, cubic	**LCS-2** Capacitive sensors, cylindrical
Specifications	Dimensions	M12: 53–75 mm M18: 73–88.5 mm M30: 66.5–79 mm / 87.3 mm	54 × 20.3 × 5.5 mm 40 × 40 × 10 mm	M12: 55–68 mm M18: 70–85 mm M30: 85–98 mm
	Type of installation	Embedded / non-embedded	Embedded	Embedded / non-embedded
	Operating voltage	10–30 V DC / 12–35 V DC	10–30 V DC	10–30 V DC
	Operating range	1–30 mm	1–20 mm	1–30 mm
	Switching outputs	PNP, NPN	PNP, NPN	PNP, NPN
	Switching principle	NO (make-contact), NC (break-contact) partially reversible	NO (make-contact), NC (break-contact)	NO (make-contact), NC (break-contact)
	Switching frequency	100 Hz (10 Hz with IO-Link)	100 Hz	100 Hz
	Connection type	M12 connector / PUR cable 2 m / PTFE cable 2 m	M12 connector / PUR cable 2 m / PUR cable 0.3 m	M12 connector / PUR cable 2 m
	Degree of protection	IP 67	IP 67	IP 67
	Certifications	CE c UL us	CE c UL us	CE
	Housing	Metal / plastic / Teflon (PTFE)	Plastic	Metal / plastic
	IO-Link	M18 and M30 version		
Properties		Adjustable switching distances | Versions with potentiometer or teach buttons | Models with chemical-resistant PTFE housing | IO-Link interface	Switching distances adjustable by means of potentiometer | Compact and flat design	Adjustable switching distances | Versions with potentiometer

Fiber optic sensors

		LV46x Fiber optic amplifiers	**GF** Glass fiber optics	**KF** Plastic fiber optics
Specifications	Dimensions excl. connector, W × D × H		Ø 4 × 250 / 500 / 1,000 / 3,000 / 5,000 mm	Ø 2.2 × 500 / 2,055 mm
	Operating voltage	10 – 30 V DC		
	Switching outputs	PNP, NPN, IO-Link		
	Connection type	M8, cable, cable+M8, cable+M12	Ø 2.2 plugged	Ø 2.2 plugged
	Degree of protection	IP 65	IP 65	
	Certifications	CE c UL us		
	Housing	Plastic	Silicone, brass, stainless steel	Plastic, models with bending protection
Throughbeam photoelectric sensors	Operating range*		0 – 450 mm	0 – 1,700 mm
	Light source	Red light, infrared	Red light , infrared (with LV46x)	Red light , infrared (with LV46x)
	Switching	Light, dark		
	Switching frequency	250 Hz ... 50 kHz		
Retroreflective photoelectric sensors	Operating range*			
	Light source			
	Switching			
	Switching frequency			
Energetic diffuse sensor	Operating range*		0 – 80 mm	0 – 270 mm
	Light source	Red light, infrared	Red light , infrared (with LV46x)	Red light , infrared (with LV46x)
	Switching	Light, dark		
	Switching frequency	250 Hz ... 50 kHz		
Diffuse sensors with background suppression	Operating range*			
	Light source			
	Switching			
	Switching frequency			
Additional functions	Repeatability			
	Switching hysteresis			
	Resolution			
	Laser class			
Properties		For glass and plastic fiber optics | High-speed or long-range amplifier | Teach-in | Sensitivity adjustment | Time functions | Multifunction input | IO-Link interface	Straight or lateral optical outlet | Multiple fiber core | Various ancillary lenses | Heat resistant, highly precise, oil and chemical resistant	Straight or lateral optical outlet | Various ancillary lenses | Arrays, V-arrangement | Various types of fiber structure, e.g., highly flexible, coax | Highly precise or heat resistant, models with bending protection

* Typical operating range limit

Ultrasonic sensors

				
		USS 18, 420 Ultrasonic sensors, cubic	**300 series** Ultrasonic sensors, cylindrical	**400 series** Ultrasonic sensors, cylindrical
Specifications	Dimensions excl. connector, W × D × H	15 × 33 × 50 mm 20 × 15 × 42 mm	M18 × 46.3 / 74.3 / 77.6 mm M30 × 88.8 mm	M12 × 70 mm M18 × 51.8 / 75 / 82.8 mm M30 × 75 / 142.5 mm
	Operating voltage	10 – 30 V DC / 12 – 30 V DC	10 – 30 V DC / 12 – 30 V DC	10 – 30 V DC / 12 – 30 V DC
	Switching outputs	PNP, NPN	PNP, NPN	PNP, NPN
	Connection type	M8, M12	M12	M8, M12, cable
	Degree of protection			
	Certifications	CE c UL us	CE c UL us	CE c UL us
	Housing	Metal, plastic	Plastic	Metal, plastic
Throughbeam photoelectric sensors	Operating range*	0 – 650 mm		0 – 6,000 mm
	Light source	Ultrasonics (300 kHz)		Ultrasonics (200 / 310 kHz)
	Switching	NO/NC (object detected)		
	Switching frequency	100 Hz		7 / 8 Hz
Retroreflective photoelectric sensors	Operating range*	0 – 400 mm	0 – 300, 0 – 800, 0 – 400, 0 – 1,600 mm	
	Light source	Ultrasonics (290 kHz)	Ultrasonics (300 / 230 kHz)	
	Switching	NC (object detected)	NC (object detected)	
	Switching frequency	20 Hz	8 / 5 / 1 Hz	
Energetic diffuse sensor	Operating range*			
	Light source			
	Switching			
	Switching frequency			
Diffuse sensors with background suppression	Operating range*	10 – 200 (100 – 1,000) mm	40 – 300, 50 – 400, 80 – 1,200, 150 – 1,600, 250 – 3,500, 350 – 6,000 mm	10 – 200, 40 – 400, 25 – 400, 150 – 1,300, 300 – 3,000, 600 – 6,000 mm
	Light source	Ultrasonics (240 – 400 kHz)	Ultrasonics (200 / 230 / 300 kHz)	Ultrasonics (200 / 310 kHz)
	Switching	NO/NC (object detected)	NO/NC (object detected)	NO/NC (object detected)
	Switching frequency	10 / 50 Hz	1 / 2 / 5 / 8 / 10 Hz	7 / 8 / 20 / 50 Hz
Additional functions	Repeatability			
	Switching hysteresis			
	Resolution			
	Laser class			
Properties		Configurable via PC | Various opening angles and sound lobes | 1 or 2 switching outputs	Configurable via PC | Teach-in | Design with angle head | 1 or 2 switching outputs | Synchronization and multiplex function | Temperature compensation	Configurable via PC | Teach-in | Design with angle head | 1 or 2 switching outputs | IO-Link interface | Synchronization and multiplex function | Temperature compensation

Light curtains

				
		CSL 505 Switching	**CSL 710** Switching	**CSR 780** Switching
Specifications	Function	Throughbeam principle	Throughbeam principle	Reflection principle
	Dimensions excl. connector, W × D × H	10 × 27 × 150 … 3,180 mm 12 × 58 × 120 … 480 mm	29 × 35 × 168 … 2,968 mm	28.6 × 34.2 × 142.8 … 478.8 mm
	Operating voltage	24 V DC	18 – 30 V DC	18 – 30 V DC
	Outputs	2x outputs / push-pull	4 I/Os (configurable) + IO-Link	Push-pull
	Connection type	M8	M12	M12
	Degree of protection	IP 65	IP 65	IP 65
	Certifications	CE c SP us	CE c SP us	CE c UL us
	Operating range*	Up to 5 m	Up to 3.5 … 7 m	700 mm
	Light source	Infrared	Infrared	Infrared
	Cycle time	1 ms per beam	30 µs per beam	> 2 ms (depending on measurement field length)
	Measurement field length	35 – 3,100 mm	160 – 2,960 mm	96 / 432 mm
	Resolution	5**, 12.5, 25, 50, 100 mm	5, 10, 20, 40 mm	1 mm
	Number of beams	Max. 160	Max. 592	
	Operation	Autocalibration, configuration software, configuration by means of pin assignment	Control buttons on foil display, 5 languages, configuration software	Status displays for detection / interruption of first and last beam
Properties		2 switching ranges | Narrow profile | Through holes | Suitable for low-temperature applications down to –30 °C	8 switching ranges | Simple area splitting | 4 switching outputs + 1 IO-Link | Robust metal housing | Extremely fast cycle time | Display for diagnosis and alignment | Suitable for low-temperature applications down to –30 °C	Detection of extremely small objects (1 mm) | Warning output for contamination display | High object speed (< 3.5 m/sec for 1 × 10 × 10 mm) | Robust metal housing | Optimal setting using reference teach, indicator LED | Reflective tape as reflector

* Guaranteed operating range
** 5 mm resolution only with 58 mm housing depth

Fork sensors

Label detection

		GS 61 Label detection, optical	**GS 63B** Label detection, optical	**GK 14** Label detection, capacitive
Specifications	Label types	Non-transparent, metalized, booklet, cavitated BOPP	Non-transparent, metalized, booklet, cavitated BOPP	Non-transparent, transparent
	Detection principle	Optical	Optical	Capacitive
	Operating voltage	10 – 30 V DC	10 – 30 V DC	10 – 30 V DC
	Switching outputs	Push-pull	Push-pull	PNP, NPN
	Switching frequency	~ 10,000 Hz	~ 10,000 Hz	~ 5,000 Hz
	Response time	< 0.05 ms	< 0.05 ms	< 0.1 ms
	Operation	Teach button / potentiometer	Teach button / potentiometer	Potentiometer
	Teach options	Manual teach, static teach	Manual teach, static teach	Manual teach
	Teach input	Yes	Yes	–
	IO-Link	–	–	–
	Automatic tracking of the switching threshold ALC function	–	Yes	–
	Warning output	–	Yes	–
	Housing dimensions	60 × 11 × 30 mm	80 × 11 × 30 mm	110 × 24 × 36.5 mm
	Housing material	Plastic, PC	Metal, plastic, diecast zinc (chemically nickel-plated), PC	Metal, aluminum
	Mouth width	3 mm	3 mm	1 mm
	Mouth depth	41 mm	61 mm	85 mm
	Connection	M8 (horizontal or vertical plug outlet), cable, cable+M12	M8 (horizontal or vertical plug outlet), cable, cable+M12	5-pin M12 (horizontal or vertical plug outlet)
	Degree of protection	IP 65	IP 67	IP 65
	Approval	CE c UL us	CE c UL us	CE
Additional functions		Slimline-design (reduced fork height) for installation directly at the dispensing edge | Removable operating head on potentiometer version	Slimline-design (reduced fork height) for installation directly at the dispensing edge | Removable operating head on potentiometer version | Storage of up to 30 teach values in the sensor	Inverting input for easy adaptation of the output signal level

			
GSU 12 Label detection, ultrasonics	**GSU 14E** Label detection, ultrasonics	**IGSU 14E** Label detection, ultrasonics	**GSX 14E** Label detection, ultrasonics, optical
Non-transparent, transparent, metalized, booklet	Non-transparent, transparent, metalized, booklet	Non-transparent, transparent, metalized, booklet	Non-transparent, transparent, metalized, booklet, cavitated BOPP
Ultrasonics	Ultrasonics	Ultrasonics	Ultrasonic + optical
12 – 30 V DC	18 – 30 V DC	18 – 30 V DC	18 – 30 V DC
Push-pull	Push-pull	Push-pull	Push-pull
~ 1.75 kHz	~ 2 kHz	~ 2 kHz	Ultrasonics: ~ 2 kHz Optical: ~ 9 kHz
< 0.24 ms	< 0.2 ms	< 0.2 ms	Ultrasonics: < 0.2 ms Optical: < 0.05 ms
1 teach button	2 keys	2 keys	2 keys
Manual teach	Manual teach	EasyTeach, static teach	EasyTeach, static teach
–	Yes	Yes	Yes
–	V1.1 (SmartSensorProfile, COM3)	V1.1 (SmartSensorProfile, COM3)	V1.1 (SmartSensorProfile, COM3)
–	–	Yes	Yes
–	–	Yes	Yes
96 × 22 × 46.9 mm	96 × 22 × 46.9 mm	96 × 22 × 46.9 mm	96 × 22 × 46.9 mm
Metal, diecast zinc (powder-coated)	Metal, diecast zinc (galvanically nickel-plated)	Metal, diecast zinc (galvanically nickel-plated)	Metal, diecast zinc (galvanically nickel-plated)
4 mm	4 mm	4 mm	4 mm
80 mm	80 mm	80 mm	80 mm
4-pin M8, 5-pin M12 (horizontal plug outlet)	5-pin M12 (horizontal or vertical plug outlet)	5-pin M12 (horizontal or vertical plug outlet)	5-pin M12 (horizontal or vertical plug outlet)
IP 65	IP 65	IP 65	IP 65
CE c UL us	CE c UL us	CE c UL us	CE c UL us
–	easy-Tune for manual adaptation of the switching threshold	easy-Tune for manual adaptation of the switching threshold | Model for splice inspection	Detection principle can be selected and changed manually | easy-Tune for manual adaptation of the switching threshold

Fork sensors

		Object detection
		 **GS (L) 04** Object detection, optical
Specifications	Operating voltage	10 – 30 V DC
	Switching outputs	PNP, NPN
	Connection type	M8
	Degree of protection	IP 65
	Certifications	CE CDRH c UL us
	Housing	Metal
Throughbeam sensors	Mouth width	20 / 30 / 50 / 80 / 120 / 220 mm
	Light source	Red light / laser (class 1)
	Switching	Light, dark
	Switching frequency	1,500 / 5,000 Hz
Additional functions	Operation	Potentiometer
Properties		Detection of small objects Light/dark switching on device

Double sheet monitoring / splice detection

DB 12B, 112B, 14B
Double sheet monitoring
VSU 12 / IGSU 14E
Splice detection

Description	The double-sheet monitoring systems reliably prevent the infeed of multiple sheets. This helps reliably prevent damage and the creation of scrap in machines that process paper and cardboard stacks. The systems operate on the basis of various physical principles and are thus able to cover nearly the entire range of applications. Splice detections reliably detect the spice on paper or plastic webs in paper- or foil-processing machines.
Typical applications	**Double sheet detection of** — Paper sheets — Cardboard sheets — Films **Splice detection, e.g. on** — Paper rolls — Paper and plastic webs
Technical information	**Physical principles:** — Capacitive — Ultrasonics (Ø 12 mm or 18 mm, short construction) **Working ranges:** — From 20 g/m² … 1,200 g/m² (cardboard thickness 2 mm) — Detection of 1/2 or 2/3 plies — Outputs for single or double sheets — Configuration facility **Models:** — Individual components (M12, M18) — Compact fork designs

Special sensors

				
		KRT 21 Contrast sensors	**KRT 20** Contrast sensors	**KRT 18B** Contrast sensors
Specifications	Function	Contrast distinction	Contrast distinction	Contrast distinction
	Dimensions excl. connector, W × D × H	31 × 53 × 80 mm	30 × 53 × 80 mm	15 × 47 × 32.5 mm
	Operating voltage	10 – 30 V DC	12 – 30 V DC	12 – 30 V DC
	Outputs	PNP, NPN	PNP, NPN, analog current	Push-pull, analog, IO-Link
	Connection type	M12	M12	M12
	Degree of protection	IP 67	IP 67, IP 69K	IP 67, IP 69K
	Certifications	CE c UL us	CE c UL us	CE c UL us
	Operating range*	0.006 … 0.012 mm	0.01 … 0.055 mm	0.01 … 0.016 mm
	Light source	LED	LED	LED
	Switching frequency	15,000 Hz	16,000 Hz	15,000 – 22,000 Hz
	Transmitter color	RGB	RGB	RGB / white
	Light beam gate	Lateral or frontal	Lateral or frontal	Front
	Light spot shape	Rectangular	Rectangular	Rectangular
	Light spot orientation	Vertical	Vertical	Lengthwise / sideways
	Operation	Teach button	Membrane keyboard, via cable	Multiturn potentiometer, buttons, teach button, IO-Link
Additional functions		Interchangeable optics (face side or front side)	Interchangeable optics (face side or front side)	easy-Tune for manual adaptation of the switching threshold

* Typical operating range limit

			
KRT 55 Contrast sensors	**KRT 3B** Contrast sensors	**CRT 20B, 448** Color sensors	**LRT 8** Luminescence sensors
Contrast distinction	Contrast distinction	Color evaluation	Luminescence detection
14 × 35.5 × 25 mm	11 × 32 × 17 mm	30 × 82 × 53 mm 17 × 46 × 50 mm	15 × 48 × 38 mm
10 – 30 V DC	10 – 30 V DC	10 – 30 V DC / 24 V DC / 12 – 28 V DC	10 – 30 V DC
PNP	Push-pull, IO-Link	1 × PNP / 4 × PNP or 1 × NPN / 4 × NPN or 3 × PNP / 3 × NPN	PNP, NPN
M8, cable+M12, cable	M8, cable, cable+M12	M12	M12
IP 67, IP 69K	IP 67	IP 67	IP 67
CE c UL us	CE CDRH c UL us	CE c UL us	CE c UL us
0.011 … 0.015 mm	0.0125 … 0.08 mm	12 mm 60 mm 32 mm	0 – 400 mm
LED	LED, laser (class 1)	LED	LED
10,000 Hz	4,000 – 10,000 Hz	6,000 / 1,500 / 500 Hz	1,500 Hz
RGB / white	RGB / white / red laser	RGB / white	UV / blue
Front	Front	Lateral or frontal	Front
Rectangular	Rectangular or round	Round / rectangular	Round
Vertical	Lengthwise / sideways	Vertical	
Teach button, via cable	Teach button, cable, IO-Link,	Teach-in	Potentiometer
easy-Tune for manual adaptation of the switching threshold | Stainless steel housing in Wash-Down design	easy-Tune for manual adaptation of the switching threshold	Small construction | Glass optics | Turnable M12 connector | ECOLAB	Small construction | Sensitivity adjustment | ECOLAB | Detection of any kind of luminescence | Detection of white paper | Detection of printed luminescence marks | Detection of luminescence marks on wood

Measuring sensors

Intelligent monitoring and control through measuring sensors

Measuring sensors can actively check distances, calculate absolute distances for the positioning of axes in plant construction and monitor other parameters in order to intelligently and independently initiate actions and, e.g., intervene in processes for control purposes.

We offer a large selection of different sensor technologies and designs that you can use to find solutions to measuring applications. Various powerful technologies facilitate optimum adaptation of our measuring sensors to a wide range of application requirements. Depending on the application, various communication interfaces are also available, such as IO-Link, bus interfaces or Ethernet-based interfaces.

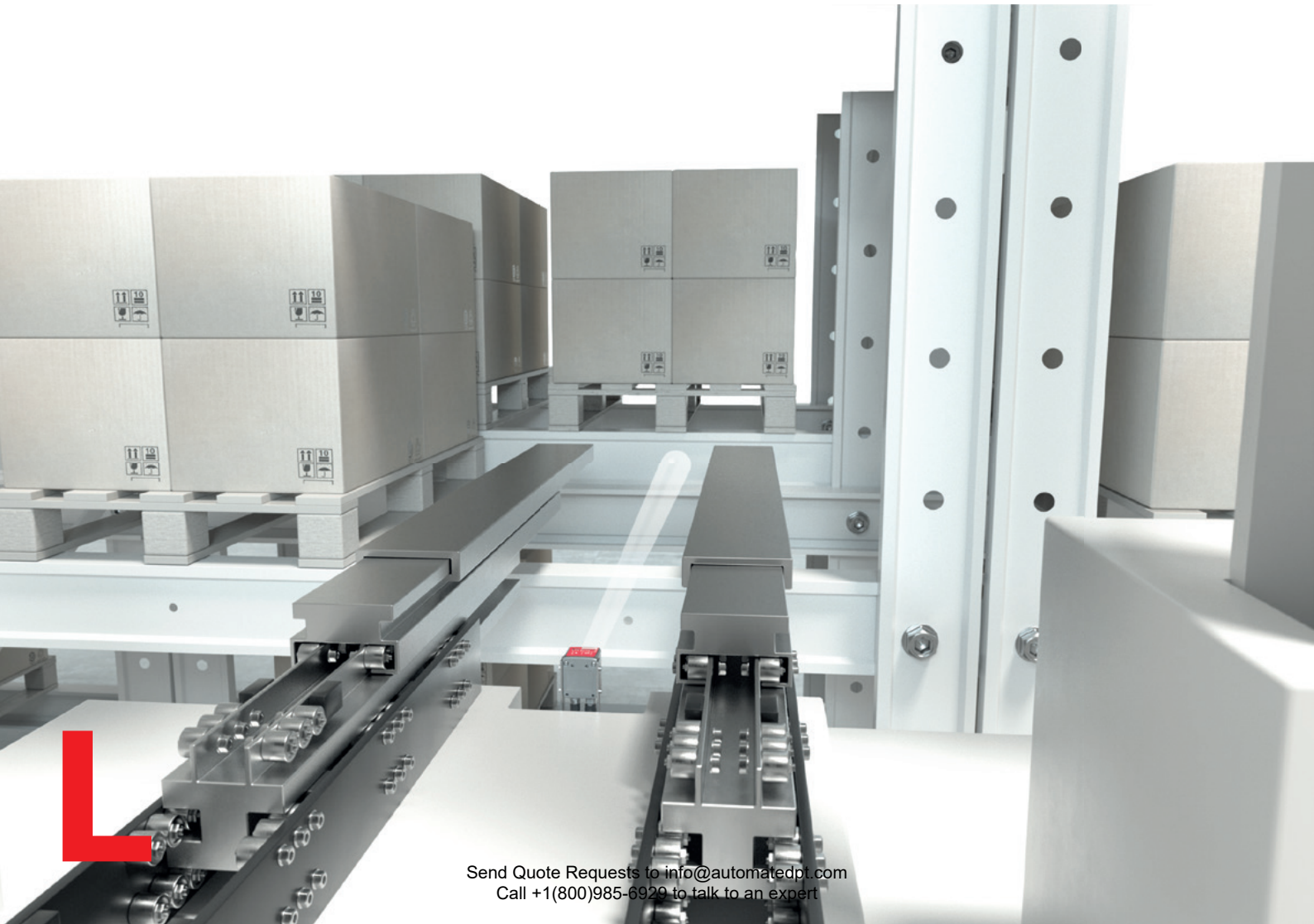

Send Quote Requests to info@automatedpt.com
Call +1(800)985-6929 to talk to an expert

Forward-looking compartment fine positioning with camera-based positioning system

The camera-based IPS 200i and IPS 400i sensors are for the compartment fine positioning of the chassis and lifting unit of the high-bay storage device in front of single- or double-depth shelf compartments.

Any deviations from the target reference position that occur during absolute positioning are thereby detected. The reference position is defined by simple bore holes or reflectors in the steel profiles in the shelf compartments. If the bore hole is located in the working range of the sensor, it delivers the current position relative to the reference position via the integrated Ethernet TCP/IP or PROFINET interface or via 4 digital switching outputs. When the current absolute and reference positions match, the ideal positioning of the high-bay storage device is reached.

Smallest size, simple operation, configuration via the integrated web server or directly on the sensor via configuration codes are just a few of the highlights of this device.

IPS 200*i* / 400*i* series

- Extremely small, camera-based positioning sensor
- Simple commissioning through printed configuration codes located directly on the device
- Fault-free use for a working range of up to 2,400 mm
- With Ethernet and PROFINET

Distance sensors

Optical distance sensors



		ODSL 8	ODS 9	ODS 10
Specifications	Function	Distance measurement, optical	Distance measurement, optical	Distance measurement, optical
	Dimensions excl. connector, W × D × H	15 × 48 × 38 mm	21 × 50 × 50 mm	25 × 65 × 55 mm
	Operating voltage	18 – 30 V DC	18 – 30 V DC	18 – 30 V DC
	Outputs	4 – 20 mA 1 – 10 V 2 × push-pull	4 – 20 mA 1 – 10 V, 0 – 10 V RS 232 / RS 485 Push-pull IO-Link	4 – 20 mA 1 – 10 V, 0 – 10 V Push-pull IO-Link
	Connection type	M12	M12	M12
	Degree of protection	IP 67, IP 69K	IP 67	IP 67
	Certifications	CE CDRH C UL US ECOLAB	CE CDRH C UL US	CE CDRH C UL US
	Measurement range	20 – 500 mm	50 – 650 mm	50 – 3,500 mm 50 – 8,000 mm (90 % diffuse reflection) 100 – 25,000 mm on reflective tape
	Measurement principle	Optical / LED / laser (class 2)	Optical / laser (class 1, 2)	Optical / laser (class 1)
	Measurement time	2 – 7 ms	1 ms	3,4 – 1,020 ms (adjustable)
	Ultrasonic frequency			
	Resolution	0.03 – 0.5 mm	0.01 – 0.5 mm	1 mm
	Operation	Teach-in Potentiometer	Teach-in Control buttons on foil display or Sensor Studio	Control buttons on foil display or Sensor Studio
Properties		Compact metal housing | Turnable M12 connector | Triangulation measurement	Display for measured value display and configuration | Turnable M12 connector | Triangulation measurement | Supports the IO-Link smart sensor profile	Display for measured value display and configuration | Turnable M12 connector | All devices with IO-Link interface | Propagation time measurement (TOF)

			Measuring ultrasonic sensors
			
ODS 110	**ODSL 30**	**ODSL 96B**	**300, 400 series**
Distance measurement, optical	Distance measurement, optical	Distance measurement, optical	Distance measurement, ultrasonics
50 × 23 × 50 mm	79 × 69 × 149 mm	30 × 90 × 70 mm	M18 × 46.3 / 51.8 / 74.3 / 75 / 77.6 / 82.8 mm M30 × 75 / 88.8 / 142.5 mm
18 – 30 V DC	10 – 30 V DC 18 – 30 V DC (analog)	10 – 30 V DC 18 – 30 V DC (analog, IO-Link)	10 – 30 V DC 12 – 30 V DC
4 – 20 mA 1 – 10 V 1x push-pull IO-Link	4 – 20 mA 1 – 10 V RS 232 / RS 485 1 × PNP, 2 × PNP, 3 × PNP	4 – 20 mA 1 – 10 V, 0 – 10 V RS 232 / RS 485 Push-pull IO-Link	PNP (NPN)
M12	M12	M12, cable	M12
IP 67	IP 67	IP 67, IP 69K	IP 67
CE c UL us	CE	CE CDRH c UL us ECOLAB	CE c UL us
100 – 3,000 mm 100 – 5,000 mm (90 % diffuse reflection)	200 – 30,000 mm 200 – 65,000 mm (on reflector)	150 – 2,000 mm 300 – 10,000 mm 300 – 25,000 mm (on reflector)	25 – 400 / 50 – 400 / 80 – 1,200 / 150 – 1,300 / 250 – 3,500 / 300 – 3,000 / 350 – 6,000 / 600 – 6,000 mm
Optical / laser (class 1)	Optical / laser (class 2)	Optical / LED / laser (class 1, 2)	Ultrasonics
4 – 20 ms	30 – 100 ms	1 – 100 ms	0.1 – 1 s
			200 kHz / 310 kHz
1 mm	1 mm	0.1 – 3 mm	1 mm
Teach-in or Sensor Studio	Teach-in Display	Teach-in Configuration software Display	Teach-In IO-Link
All devices with IO-Link interface | Turnable M12 connector | Adjustment via teach button | Propagation time measurement (TOF)	Metal housing | Display for measured value display and configuration | M12 connector | Ex devices are also available | Phase measurement	Robust metal housing | Display for measured value display and configuration | M12 connector | Ex devices are also available | Triangulation measurement | Propagation time measurement (TOF) | Phase measurement	3/5 operating modes | Temperature-compensated | Metal/plastic housing | Small dead zone

Sensors for positioning

		Optical laser distance sensors	Bar code positioning systems	
				
		AMS 300i	**BPS 8**	**BPS 300i**
Specifications	Function	Distance measurement, optical	Position detection, optical	Position detection, optical
	Operating range	40 / 120 / 200 / 300 m	10,000 m	10,000 m
	Reading distance		60 … 140 mm	50 … 170 mm
	Interfaces	**Integrated:** PROFIBUS and SSI PROFINET PROFINET and SSI DeviceNet EtherCAT EtherNet/IP CANopen Ethernet TCP/IP, UDP Interbus-S RS 232, RS 422, RS 485 SSI	**Integrated:** RS 232	**Integrated:** PROFINET EtherCAT PROFIBUS SSI RS 422 RS 232 RS 485
	Connectivity	Via the interfaces mentioned above	**With MA 200i connection unit** PROFINET IO/RT, PROFIBUS, Ethernet TCP/IP, UDP, IP, EtherCAT, DeviceNet, CANopen	
	Position calculation through	Reflector	Bar code tape	Bar code tape
	Measurement value output	1.7 ms	3.3 ms	1 ms
	Reproducibility	±0.9 / 1.5 / 2.1 / 3 mm (3 sigma)	±1 mm (3 sigma)	±0.15 mm (3 sigma)
	Accuracy	±2 / 2 / 3 / 5 mm		
	Degree of protection	IP 65	IP 67	IP 65
	Light source	Red light laser (class 2)	Red light laser (class 2)	Red light laser (class 1)
	Supply voltage	18 – 30 V DC	5 V DC (24 V DC via MA 8-01)	18 – 30 V DC
	Operating temperature	–5 … +50 °C (–30 … +50 °C with heating)	0 … +40°C	–5 … +50 °C (–35 … +50 °C with heating)
	Options	Speed measurement and monitoring	Customer-specific configuration facility	Speed measurement and monitoring
	Certifications	CE CDRH c UL us	CE CDRH c UL us	CE CDRH c UL us
Properties		Absolute measurement system with very high accuracy, tested by the Physikalisch Technische Bundesanstalt (German Metrology Institute) | Simultaneous use of the PROFIBUS and SSI; alternatively, PROFINET and SSI interface | Easy programming via extensive configuration file | Optionally with heating | Multiple language menu-driven display | Heatable reflectors available as accessories	Distance measurements of up to 10,000 m, also for curves, gradients and track switches | Curve-going, horizontally and vertically | Compact metal housing | Turnable M12 connector | Large selection of different protocols via external MA 200i connection units	Positioning on curves, gradients and track switches | Curve-going, horizontally and vertically | Metal housing | 3 selectable connection systems | Fast, secure and position-neutral installation using special mounting device | Extensive diagnostic options | Comfortable programming via GSDML/GSD or ESI files | Optionally with heating or display

3D sensors / fork sensors

		Light section sensors	Measuring laser scanner	CCD fork sensors
				
		LPS 36, 36 HI **LES 36, 36 HI** **LRS 36**	**ROD 4 (plus)**	**GS 754B**
Specifications	Function	Distance measurement, light section, optical	Distance measurement, scanner, optical	Edge/diameter measurement, optical
	Dimensions excl. connector, W × D × H	56 × 74 × 160 mm	140 × 148 × 133 mm 141 × 167 × 168 mm	19.4 × 81.5 × 91 mm 20 × 155 × 91.5 mm
	Operating voltage	18 – 30 V DC	24 V DC	10 – 30 V DC (digital) 18 – 30 V DC (analog)
	Outputs	4 – 20 mA 1 – 10 V Ethernet 4 × push-pull PROFIBUS	Ethernet / RS 232 / RS 422 4 × PNP, 8 reversible detection field pairs	2 × 4 – 20 mA 2 × 0 – 10 V RS 232 / RS 422 / RS 485 1 × PNP, 2 × PNP
	Connection type	M12	Sub-D, M12, M16	M12
	Degree of protection	IP 67	IP 65	IP 67
	Certifications	CE CDRH c UL us	CE CDRH c UL us	CE c UL us
	Operating range*	200 – 800 / 200 – 600 mm	0 – 65 m	
	Measurement principle	Optical / laser (class 2M)	Optical / laser (class 1)	Optical / LED
	Measurement time	10 ms	20 – 40 ms/scan	Min. 2.5 ms
	Measurement field width / Scanning angle	Max. 600 mm / max. 140 mm	0.36 °	25 mm
	Resolution	0.1 – 6 mm	5 mm	14 µm
	Mouth width			27 / 98 mm
	Mouth depth		7	42 mm
	Number of inspection tasks	16	7	5
	Operation	Configuration software Display	Configuration software	Terminal program via RS232 interface
Properties		LPS 36: light section sensor for 2D/3D object measurement | LPS 36 HI: highly precise with a resolution of 0.1 mm | LES 36: light section sensor for width/height and position measurement | LRS 36: light section sensor for object detection in up to 16 detection fields | Alignment aid with OLED display; inputs: activation, cascading, trigger | Optional: encoder port	Laser scanners for object measurement and detection | Version with 20 ms/scan (50 Hz) | Version with 40 ms/scan (25 Hz) | Contamination suppression | Optionally with heating	Detection of transparent media | Foil detection > 0.1 mm | Turnable M12 connector | Wide-ranging evaluation functions | Perfect for thread and fiber measurement

* Guaranteed operating range

Sensors for compartment fine positioning

		IPS 200i Sensors for positioning	**IPS 400i** Sensors for positioning
Typical applications	Compartment fine positioning	Single compartment depth	Double compartment depth
	Sensor / cameras	CMOS (Global Shutter)	CMOS (Global Shutter)
	Resolution (pixel)	1,280 × 960	1,280 × 960
	Focal point	Reading distance 100 … 600 mm Marker dependent	Reading distance 250 – 2,400 mm Marker-dependent
	Interface	**Integrated:** Ethernet TCP/IP, UDP PROFINET IO/RT	**Integrated:** Ethernet TCP/IP, UDP PROFINET IO/RT
	Digital inputs/outputs	3x IN; 5x OUT	3x IN; 5x OUT
	Optional	Cables, mounting devices, reflectors, heating model to –30°C	Cables, mounting devices, reflectors, heating model to –30°C, external illumination
	Number of test routines	8	8
	Configuration / Operating system	Web-based configuration tool (webConfig tool) XML commands; 2x operational controls	Web-based configuration tool (webConfig tool) XML commands; 2x operational controls
	Options	Configuration on the device via configuration codes	Configuration on the device via configuration codes
	Dimensions, W × H × D	43 × 61 × 44 mm	43 × 61 × 44 mm
	Certifications	CE c UL us	CE c UL us
Properties		Time savings through fast commissioning via web-based configuration tool or printed configuration codes | Innovative alignment system via feedback LEDs simplifies alignment | One device for the entire region of interest from 100–600 mm | Quality score enables the early detection of a deterioration in reading performance | Can be used flexibly thanks to high-performance, infrared LED illumination that is independent of ambient light | Model with integrated heating for use to –30°C	Time savings through fast commissioning via web-based configuration tool or printed configuration codes | Innovative alignment system via feedback LEDs simplifies alignment | Quality score enables the early detection of a deterioration in reading performance | One device for double-depth working range from 250 – 2,400 mm | Can be used flexibly thanks to high-performance, infrared LED illumination that is independent of ambient light | Model with integrated heating for use to –30°C

Light curtains/ volume measure-ment system

		CML 700i Measuring	CML 720i EX Measuring	CMS 700i Measuring
Specifications	Function	Size / contour detection, optical	Size / contour detection, optical	Size / contour detection, optical
	Dimensions excl. connector, W × D × H	29 × 35 × 168 … 2,968 mm	29 × 35 × 168 … 2,968 mm	Dependent on the system configuration
	Operating voltage	18 – 30 V DC	18 – 30 V DC	230 V AC
	Outputs	Analog, CANopen, IO-Link, PROFIBUS PROFINET RS 485 (MODBUS)	CANopen, IO-Link, 2 to 4 I/Os (configurable)	4 I/Os, Ethernet TCP/IP, PROFINET
	Connection type	M12	M12	M12 and grounding bolts
	Degree of protection	IP 65	IP 54	IP 54 switch cabinet / IP 65 light curtain
	Certifications	CE c US	CE	CE
	Operating range*	4.5 … 9.5 m	7 m	
	Light source / Measurement principle	Infrared	Infrared	Infrared
	Cycle time / Measurement time	10 – 30 µs per beam + 0,4 ms	30 µs per beam + 0,4 ms	Dependent on conveyor speed and object size
	Measurement field length / Scanning angle	160 – 2,960 mm	130 – 2,870 mm	5 mm resolution: 50 × 50 × 5 mm³ – ** 2,400 × 1,200 × 1,200 mm³ 10 mm resolution: 50 × 50 × 5 mm³ – 2,400 × 2,400 × 2,400 mm³ (L × W × H)
	Resolution	5, 10, 20, 40 mm	5, 10, 20 mm	5, 10 mm
	Number of beams	Max. 592	Max. 592	
	Mouth width			
	Mouth depth			
	Operation	Control buttons on foil display, 5 languages, configuration software	Control buttons on foil display, 5 languages, configuration software	webConfig
Properties		Cycle time CML 730: 10 µs x number of beams + 0.4 ms | Cycle time CML 720: 30 µs x number of beams + 0.4 ms | Detection of transparent media | Display for diagnosis and alignment | Standard profile for simple mounting | Robust metal housing | Suitable for low-temperature applications down to –30 °C	Cycle time: 30 µs x number of beams + 0.4 ms | Display for diagnosis and alignment | Standard profile for simple mounting | Robust metal housing	Contour measurement system for passing objects | Output of the smallest enclosing cuboid of the object | Output of object protrusions and bulges | Output of the object position and orientation angle on the conveyor | Collection and looping through of external data from, e.g., scales, bar code readers | Easy commissioning by the customer | Total system can be ordered with one part number

* Guaranteed operating range
** Minimum object height 5 mm only for version with rotary encoder for length measurement; minimum object height for version with light curtain for length measurement is 50 mm

Safety at Leuze

From a single source: Products and services that protect the operator and facilitate efficient processes

Machine safety no longer means just personnel protection. It also makes an important contribution to the efficient and smooth flow of processes.

As one of the technology leaders in the area of optoelectronic safety sensors, we offer competent and extensive consultation on the topic of safety at work. In addition to our wide range of safety sensors, we also offer safety switches and safety locking devices as well as safe control components.

We provide you with well thought-out and reliable solutions for safety at work from a single source. In doing so, we place great importance on the simple and efficient integration and installation of our safety technology. Innovative connection concepts, integrated alignment aids, operating mode selection without PC and integrated gateway functions are just a few examples here.

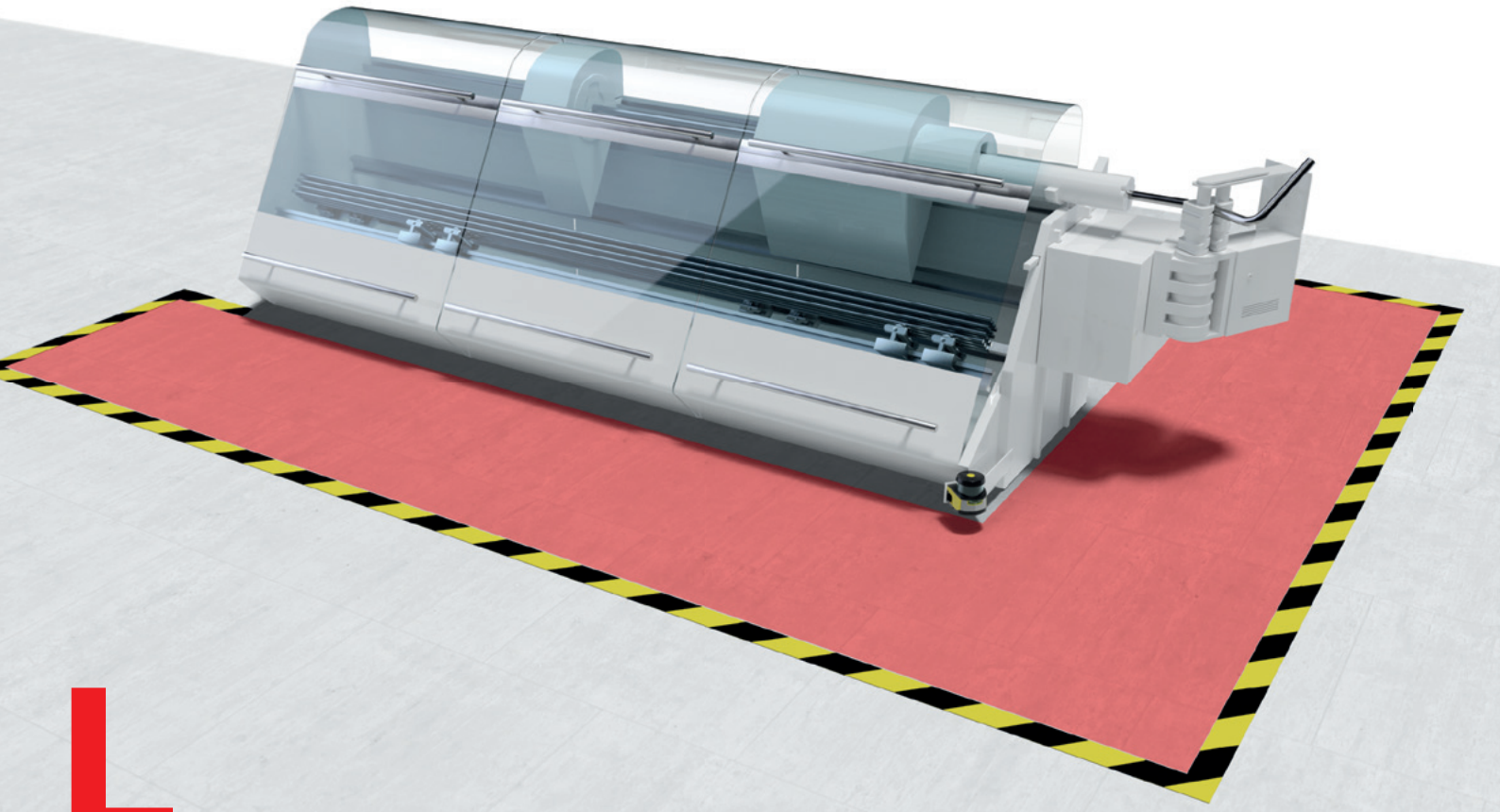

Highly efficient safety laser scanner: clever area protection and access guarding

With the RSL 400 safety laser scanner, we have set a new standard worldwide in the supreme discipline of safety sensor technology.

Thanks to our decades of experience, we have succeeded in developing a device which, through clever detailed solutions, combines reliable operation with simple configuration and installation of devices.

In many cases the RSL 400 can even be used to perform tasks that previously required two safety laser scanners.

RSL 400

- Scanning angle of 270° and operating range of 8.25 m
- Easy-to-mount, removable measuring unit for simple and quick exchange
- 2 independent protective functions in one device
- PROFINET/PROFIsafe interface for simple integration in industrial networks
- High-quality data output for navigation of automated guided vehicles and first-class safety technology in a single device

Safety laser scanners

		RSL 410 Safety laser scanners	**RSL 420, 425** Safety laser scanners
Specifications	Type in accordance with EN IEC 61496	Type 3	Type 3
	SIL in accordance with IEC 61508 and EN IEC 62061 (SILCL)	SIL 2	SIL 2
	Performance Level (PL) in accordance with EN ISO 13849-1	PL d	PL d
	Resolution (adjustable)	30 / 40 / 50 / 60 / 70 / 150 mm	30 / 40 / 50 / 60 / 70 / 150 mm
	Operating range	3 / 4.5 / 6.25 / 8.25 m	3 / 4.5 / 6.25 / 8.25 m
	Scanning angle	270°	270°
	Number of field pairs / 4-field sets	1 / 1	10 / 10
	Dimensions, W × H × D	140 × 149 × 140 mm	140 × 149 × 140 mm
	Safety-related switching outputs	2 PNP transistor outputs	2 PNP transistor outputs
	Connection type	M12 connector, configuration and diagnosis via Ethernet TCP/IP and Bluetooth	Cable or connector, 16-pin, configuration and diagnosis via Ethernet TCP/IP, USB and Bluetooth
	Certifications	CE CDRH c UL us TÜV TÜV	CE CDRH c UL us TÜV TÜV
Functions		Selectable functions: resolution, dynamic contactor monitoring (EDM), start/restart interlock (RES) | Vertical access guarding with reference boundary monitoring | Four-field mode	Selectable functions: resolution, dynamic contactor monitoring (EDM), start/restart interlock (RES) | Vertical access guarding with reference boundary monitoring | Four-field mode | E-Stop linkage | RSL 425: measurement value output for AGV navigation
Properties		1 field pair/4-field set | Basic functions such as automatic start/restart, start/restart interlock (RES), contactor monitoring (EDM) can be selected | Optimum handling by means of separate intelligent connection unit with integrated configuration memory and large, plain-text display with integrated electronic spirit level | 3 configurable signal outputs	10 field pairs/4-field sets | Basic functions such as automatic start/restart, start/restart interlock (RES), contactor monitoring (EDM) can be selected | Optimum handling by means of separate intelligent connection unit with integrated configuration memory and large, plain-text display with integrated electronic spirit level | 4 configurable signal outputs | RSL 425: output of high-quality measurement values for distance and signal strength via UDP, angular resolution 0.1°, configurable

			
RSL 430 Safety laser scanners	**RSL 440, 445** Safety laser scanners	**RSL 420P** Safety laser scanner PROFIsafe	**RSL 450P, 455P** Safety laser scanner PROFIsafe
Type 3	Type 3	Type 3	Type 3
SIL 2	SIL 2	SIL 2	SIL 2
PL d	PL d	PL d	PL d
30 / 40 / 50 / 60 / 70 / 150 mm	30 / 40 / 50 / 60 / 70 / 150 mm	30 / 40 / 50 / 60 / 70 / 150 mm	30 / 40 / 50 / 60 / 70 / 150 mm
3 / 4.5 / 6.25 / 8.25 m	3 / 4.5 / 6.25 / 8.25 m	3 / 4.5 / 6.25 / 8.25 m	3 / 4.5 / 6.25 / 8.25 m
270°	270°	270°	270°
10+10 / 10	100 / 50	10 / 10	100 / 50
140 × 149 × 140 mm	140 × 149 × 140 mm	140 × 169 × 140 mm	140 × 169 × 140 mm
2 x 2 PNP transistor outputs	2 x 2 PNP transistor outputs	PROFIsafe, 1 protective field	PROFIsafe, 4 parallel protective fields
Cable or connector, 29-pin, configuration and diagnosis via Ethernet TCP/IP, USB and Bluetooth	Cable or connector, 29-pin, configuration and diagnosis via Ethernet TCP/IP, USB and Bluetooth	3x M12 connector for 2-port switch and voltage supply or 4x M12 connector (L-coded) with additional voltage output | AIDA variant with push-pull connectors, communication via copper or fiber-optic cable, configuration also possible via USB and Bluetooth	3x M12 connector for 2-port switch and voltage supply or 4x M12 connector (L-coded) with additional voltage output | AIDA variant with push-pull connectors, communication via copper or fiber-optic cable, configuration also possible via USB and Bluetooth
CE CDRH c UL us	CE CDRH c UL us	CE CDRH c UL us	CE CDRH c UL us
Selectable functions: resolution, dynamic contactor monitoring (EDM), start/restart interlock (RES) | Vertical access guarding with reference boundary monitoring | Four-field mode | E-Stop linkage | Safe time delay, internal | Data output, configurable	Selectable functions: resolution, dynamic contactor monitoring (EDM), start/restart interlock (RES) | Vertical access guarding with reference boundary monitoring | Four-field mode | E-Stop linkage | Safe time delay, internal | Data output, configurable | RSL 445: measurement value output for AGV navigation	Selectable functions: resolution, start/restart interlock (RES) | Vertical access guarding with reference boundary monitoring | Four-field mode	Selectable functions: resolution, start/restart interlock (RES) | Vertical access guarding with reference boundary monitoring | Four-field mode | Data output, configurable | RSL 455: measurement value output for AGV navigation
10+10 field pairs/4-field sets, reversible | Two independent protective functions and OSSD pairs | Basic functions such as automatic start/restart, start/restart interlock (RES) | Optimum handling by means of separate intelligent connection unit with integrated configuration memory and large, plain-text display with integrated electronic spirit level | 9 configurable signal outputs | Safe, internal switch-off delay (Stop 1)	100 field pairs/50 4-field sets, reversible | Two independent protective functions and OSSD pairs | Basic functions such as automatic start/restart, start/restart interlock (RES), contactor monitoring (EDM) can be selected | Optimum handling by means of separate intelligent connection unit with integrated configuration memory and large, plain-text display with integrated electronic spirit level | Up to 10 independent sensor configurations, ideal for mobile applications | 9 configurable signal outputs | Safe, internal switch-off delay (Stop 1) | RSL 445: Output of high-quality measurement values for distance and signal strength via UDP, angular resolution 0.1°, configurable	Optimum handling through removable connection unit with integrated 2-port PROFINET-switch switch and integrated configuration memory | Conformance Class C, IRT-capable | 10 field pairs/4-field sets, reversible | Basic functions such as automatic start/restart, start/restart interlock (RES), can be selected | Large, plain-text display with integrated electronic spirit level | Configuration also via Bluetooth and USB interface	Optimum handling through removable connection unit with integrated 2-port PROFINET-switch switch and integrated configuration memory | Conformance Class C, IRT-capable | 100 field pairs/50 4-field sets, reversible | Evaluation of up to 4 protective fields | Basic functions such as automatic start/restart, start/restart interlock (RES), can be selected | Large, plain-text display with integrated electronic spirit level | Configuration also via Bluetooth and USB interface | Up to 10 independent sensor configurations, ideal for mobile applications | RSL 455P: output of high-quality measurement values for distance and signal strength via UDP, angular resolution 0.1°, configurable

Safety at Leuze

Safety light curtains

			
		MLC 310 Type 2 safety light curtains	**MLC 320** Type 2 safety light curtains
Specifications	Type in accordance with EN IEC 61496	Type 2	Type 2
	SIL in accordance with IEC 61508 and EN IEC 62061 (SILCL)	SIL 1	SIL 1
	Performance Level (PL) in accordance with EN ISO 13849-1	PL c	PL c
	Resolution	20 / 30 / 40 / 90 mm	20 / 30 / 40 / 90 mm
	Operating range (depending on resolution)	15 / 10 / 20 / 20 m	15 / 10 / 20 / 20 m
	Protective field height (type-dependent)	150 … 3,000 mm	150 … 3,000 mm
	Profile cross section	29 × 35 mm	29 × 35 mm
	Safety-related switching outputs (OSSDs)	2 PNP transistor outputs	2 PNP transistor outputs
	Connection type	M12	M12
	Certifications	CE	CE
Functions		Transmission channel changeover | Range reduction	Transmission channel changeover | Range reduction | Start/restart interlock (RES) | Contactor monitoring (EDM) | 7-segment display
Properties		Configuration by wiring – automatic transfer to replacement device after device exchange	Configuration by wiring – automatic transfer to replacement device after device exchange

			
MLC 510 Type 4 safety light curtains	**MLC 520** Type 4 safety light curtains	**MLC 530** Type 4 safety light curtains	**MLC 530 SPG** Type 4 safety light curtains
Type 4	Type 4	Type 4	Type 4
SIL 3	SIL 3	SIL 3	SIL 3
PL e	PL e	PL e	PL e
14 / 20 / 30 / 40 / 90 mm	14 / 20 / 30 / 40 / 90 mm	14 / 20 / 30 / 40 / 90 mm	30 / 40 / 90 mm
6 / 15 / 10 / 20 / 20 m	6 / 15 / 10 / 20 / 20 m	6 / 15 / 10 / 20 / 20 m	10 / 20 / 20 m
150 … 3,000 mm	150 … 3,000 mm	150 … 3,000 mm	150 … 3,000 mm
29 × 35 mm	29 × 35 mm	29 × 35 mm	29 × 35 mm
2 PNP transistor outputs or AS-i Safety interface	2 PNP transistor outputs	2 PNP transistor outputs	2 PNP transistor outputs
M12	M12	M12	M12
Transmission channel changeover | Range reduction	Transmission channel changeover | Range reduction | Start/restart interlock (RES) | Contactor monitoring (EDM) | 7-segment display	Transmission channel changeover | Range reduction | Start/restart interlock (RES) | Contactor monitoring (EDM) | 7-segment display, linkage | Fixed and floating beam blanking | Reduced resolution | Timing controlled 2-sensor muting | Muting-timeout extension | Partial muting	Transmission channel changeover | Range reduction | Start/restart interlock (RES) | 7-segment display | Fixed blanking | Integrated muting function with control via PLC signal (no muting sensors necessary)
Configuration by wiring – automatic transfer to replacement device after device exchange| Extra impact-resistant models available | Models available with extra high interference rejection against ambient light	Configuration by wiring – automatic transfer to replacement device after device exchange | Extra impact-resistant models available	Configuration by wiring – automatic transfer to replacement device after device exchange | Linkage with safety devices via contact or OSSD output saves effort in downstream evaluation circuit | Multiple scanning and reduced resolution for operation which is immune to interference | Integrated muting and blanking function can be activated during operation | Extra impact-resistant models available	Configuration by wiring – automatic transfer to replacement device after device exchange | Efficient access guarding without muting sensors: high level of availability and protection against tampering with a very compact system design

Safety light curtains

MLC 511 AIDA
Type 4 safety light curtains

Specifications	Type in accordance with EN IEC 61496	Type 4
	SIL in accordance with IEC 61508 and EN IEC 62061 (SILCL)	SIL 3
	Performance Level (PL) in accordance with EN ISO 13849-1	PL e
	Resolution	14 / 30 mm
	Operating range	6 / 10 m
	Protective field height (type-dependent)	300 … 1,800 mm
	Profile cross section	29 × 35 mm
	Safety-related switching outputs (OSSDs)	2 PNP transistor outputs
	Connection type	M12
	Certifications	CE
Functions		Transmission channel changeover | Range reduction | Automatic start/ restart
Properties		Plug connection with AIDA-compliant M12 pin assignment (4-pin) (Automatisierungs-Initiative deutscher Automobilisten (AIDA) = Automation initiative of German automobile manufacturers) | Configuration by wiring – automatic transfer to replacement device after device exchange

The external MLC alignment aid is a practical tool with which the transmitter can be precisely aligned more quickly.

	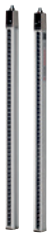		
MLC 520 **Host-Guest** Type 4 safety light curtains	**MLC 520** **EX2** Type 4 safety light curtains	**MLC 510** **IP 67/69K** Type 4 safety light curtains	**MLC 520-S** **Extra slim design** Type 4 safety light curtains
Type 4	Type 4	Type 4	Type 4
SIL 3	SIL 3	SIL 3	SIL 3
PL e	PL e	PL e	PL e
14 / 20 / 30 / 40 / 90 mm	20 / 30 mm	14 / 30 mm	14 / 24 mm
6 / 15 / 10 / 20 / 20 m	15 / 10 m	4.8 / 8 m	6 m
300 … 1,800 mm	600 … 1,500 mm	300 … 1,200 mm	150 … 1,200 mm
29 × 35 mm	29 × 35 mm	Ø 52.5 mm	15,4 × 32.6 mm
2 PNP transistor outputs AS-i Safety interface	2 PNP transistor outputs	2 PNP transistor outputs	2 PNP transistor outputs
M12	M12	Cable, 15 m	160 mm cable with M12 connector
CE	CE	CE	CE c UL US
Transmission channel changeover | Range reduction | Start/restart interlock (RES) | Contactor monitoring (EDM) | 7-segment display | Cascadable	Transmission channel changeover | Range reduction | Start/restart interlock (RES) | Contactor monitoring (EDM) | 7-segment display	Transmission channel changeover | Range reduction	Start/restart interlock (RES) | Contactor monitoring (EDM) | Cascadable via adapter cable
Host, middle-guest and guest devices combine point of operation guarding with area protection | Configuration by wiring – automatic transfer to replacement device after device exchange	Certified for applications in potentially explosive areas of group II, category 3, zone 2 (gas) and zone 22 (dust) | Configuration by wiring – automatic transfer to replacement device after device exchange	The configuration is simply performed by means of wiring | Pre-mounted in transparent, encapsulated tube	Extra slim design without dead zones | Especially fine length grid of 30 mm | Configuration by wiring – automatic transfer to replacement device after device exchange

Multiple light beam safety devices

Specifications	Type in accordance with EN IEC 61496
	SIL in accordance with IEC 61508 and EN IEC 62061 (SILCL)
	Performance Level (PL) in accordance with EN ISO 13849-1
	Number of beams/beam distance
	Operating range
	Profile cross section
	Safety-related switching outputs (OSSDs)
	Connection type
	Certifications
Functions	
Properties	

			
MLD 310, 510 Type 2 / 4 multiple light beam safety devices	**MLD 320, 520** Type 2 / 4 multiple light beam safety devices	**MLD 330, 530** Type 2 / 4 multiple light beam safety devices	**MLD 335, 535** Type 2 / 4 multiple light beam safety devices
Type 2 / Type 4	Type 2 / Type 4	Type 2 / Type 4	Type 2 / Type 4
SIL 1 / SIL 3	SIL 1 / SIL 3	SIL 1 / SIL 3	SIL 1 / SIL 3
PL c / PL e	PL c / PL e	PL c / PL e	PL c / PL e
2 / 500 mm 3 / 400 mm 4 / 300 mm	2 / 500 mm 3 / 400 mm 4 / 300 mm	2 / 500 mm 3 / 400 mm 4 / 300 mm	2 / 500 mm 3 / 400 mm 4 / 300 mm
0.5 ... 50 m or 20 ... 70 m (transmitter-receiver systems) 0.5 ... 6/8 m (transceiver systems)	0.5 ... 50 m or 20 ... 70 m (transmitter-receiver systems) 0.5 ... 6/8 m (transceiver systems)	0.5 ... 50 m or 20 ... 70 m (transmitter-receiver systems) 0.5 ... 6/8 m (transceiver systems)	0.5 ... 50 m or 20 ... 70 m (transmitter-receiver systems) 0.5 ... 6/8 m (transceiver systems)
52 × 65 mm	52 × 65 mm	52 × 65 mm	52 × 65 mm
2 PNP transistor outputs AS-i Safety interface	2 PNP transistor outputs	2 PNP transistor outputs	2 PNP transistor outputs
M12	M12	M12	M12
Automatic start/restart	Automatic start/restart | Start/restart interlock (RES), selectable | Contactor monitoring (EDM), selectable | 7-segment display	Start/restart interlock (RES) | Contactor monitoring (EDM), selectable | 2-sensor muting (timing controlled, sequence controlled) | Muting-timeout extension to up to 100 hours | Configurable operating modes | 7-segment display	Start/restart interlock (RES) | Contactor monitoring (EDM), selectable | 2-sensor muting (sequence controlled), 4-sensor muting (timing controlled) | Muting-timeout extension to up to 100 hours | Configurable operating modes | 7-segment display
Transceiver systems available in 2- or 3-beam version | Transmitter-receiver systems available in 2-, 3- or 4-beam version | The configuration is simply performed by means of wiring, i. e. no software, PC or DIP switch are necessary | The use at ambient temperatures as low as –30 °C is possible | Degree of protection IP 67 | Options: integrated laser alignment aid (with transmitter-receiver systems), integrated status indicator	Transceiver systems available in 2- or 3-beam version | Transmitter-receiver systems available in 2-, 3- or 4-beam version | The configuration is simply performed by means of wiring, i. e. no software, PC or DIP switch are necessary | The use at ambient temperatures as low as –30 °C is possible | Degree of protection IP 67 | Options: integrated laser alignment aid (with transmitter-receiver systems), integrated status indicator	Transceiver systems available in 2- or 3-beam version | Transmitter-receiver systems available in 2-, 3- or 4-beam version | Integrated muting function, no additional muting module is necessary | The configuration is simply performed by means of wiring, i. e. no software, PC or DIP switch are necessary | The use at ambient temperatures as low as –30 °C is possible | Degree of protection IP 67 | Options: integrated laser alignment aid (with transmitter-receiver systems), integrated muting and status indicator	Transceiver systems available in 2- or 3-beam version | Transmitter-receiver systems available in 2-, 3- or 4-beam version | Integrated muting function, no additional muting module is necessary | The configuration is simply performed by means of wiring, i. e. no software, PC or DIP switch are necessary | The use at ambient temperatures as low as –30 °C is possible | Degree of protection IP 67 | Options: integrated laser alignment aid (with transmitter-receiver systems), integrated muting and status indicator

Protective sensor sets and accessories

			
	UDC / DC Device columns	**UMC** Mirror columns	**MLC-UDC** Protective sensor sets
Description	The UDC / DC device columns enable the stable, freestanding mounting of multiple light beam safety devices and safety light curtains on the floor | The robust profile construction in high-quality design will win you over with simple device mounting and the quick vertical and axial alignment in just a few steps	By combining UMC mirror columns with single- and multiple light beam safety devices or safety light curtains, cost-effective, multiple-side danger zone guarding can be realized | Robust design and simple handling also increase the effectiveness of the safety device	In addition to the MLC 500 safety light curtain as an optical protective device, these sets also include device columns in which the safety sensor is pre-mounted in such a manner that it can very easily be height-adjusted.
Properties	Simple, stepless mounting and height adjustment of the installed devices by means of supplied mounting brackets | Design with closed or open top by means of simple, snap-in column cover | Protection against device contamination and damage by means of easy-to-replace protective screens (PSC) | Fast leveling through integrated level in column foot | Automatic resetting after mechanical impacts with special spring elements (UDC) | Complete mounting set for floor fixing included with delivery (UDC)	Individual mirror, adjustable separately in height and alignment, for beam deflection with multiple light beam safety devices | Axially adjustable continuous mirror surface for beam deflection with safety light curtains | Fast leveling through integrated level in column foot | Automatic resetting after mechanical impacts with special spring elements | Complete mounting set for floor fixing included with delivery	Transmitter-receiver system with safety light curtain MLC 500 | Set for access guarding with hand/finger detection | Optimally matched mechanically; pre-mounted and pre-aligned | Device column with complete mounting kit for exact floor alignment | Automatic resetting after mechanical impacts thanks to special spring elements

MLD-UDC Protective sensor sets	**Set-AC-M** Muting sensor sets	**MLDSET** Protective sensor sets	**M4 / M7** Muting indicators
In addition to the MLD 500 multiple light beam safety device as an optical protective device, these sets also include device columns in which the safety sensor is pre-mounted in such a manner that it can very easily be height-adjusted.	The Set-AC-M muting sensor sets for protective sensors and safety light curtains simplify the setup and operation of muting solutions | The sets are optimally tailored to modern machines and systems both mechanically and electrically and through their innovative design	The MLDSET protective sensor sets offer complete solutions for access guarding in which muting functions are needed for material transport | The pre-mounted sets ensure efficient installation and quick and easy commissioning. Tailored to various muting tasks, a number of Plug & Play models are available	The M4 and M7 muting indicators are used for the reliable display of the muting state in safety-relevant applications | They are used in combination with multiple light beam safety devices or safety light curtains
Plug & Play solutions, optionally as transceiver or transmitter-receiver system | Set for access guarding, i.e. pre-mounted transmitter / receiver or transceiver / deflecting mirror in device column | Optimally matched mechanically; pre-mounted and pre-aligned | Device column with complete mounting kit for exact floor alignment | Fast leveling through integrated level in column foot | Automatic resetting after mechanical impacts thanks to special spring elements	Pre-mounted and aligned muting sensors for direct connection to the safety sensors | 2-sensor muting (timing controlled & sequential); 4-sensor muting (timing controlled) | Simple lateral mounting on device columns as well as on multiple light beam safety devices and safety light curtains | Optimally matched to transceiver systems through the use of retro-reflective photoelectric sensors (only one-sided wiring) | Fast start-up through immediately ready-to-use, turnkey design	Pre-mounted and aligned multiple light beam safety device systems in device columns for direct integration in machine and system controls | 2-sensor muting (timing controlled & sequential); 4-sensor muting (timing controlled) | Simple logistical handling through individual complete solutions in a single set | Fast start-up of the complete system through immediately ready-to-use, turnkey design with pluggable connections	Simple mounting and commissioning, since M12 connector, interconnection cable (2 m), mounting bracket and mounting kit are included in the scope of delivery and are pre-mounted | Low risk of failure through the use of LEDs with a life expectancy of at least 100,000 hours | Modern design through the use of a clear housing, signal indicator with white continuous light | UL approval and high degree of protection IP 66

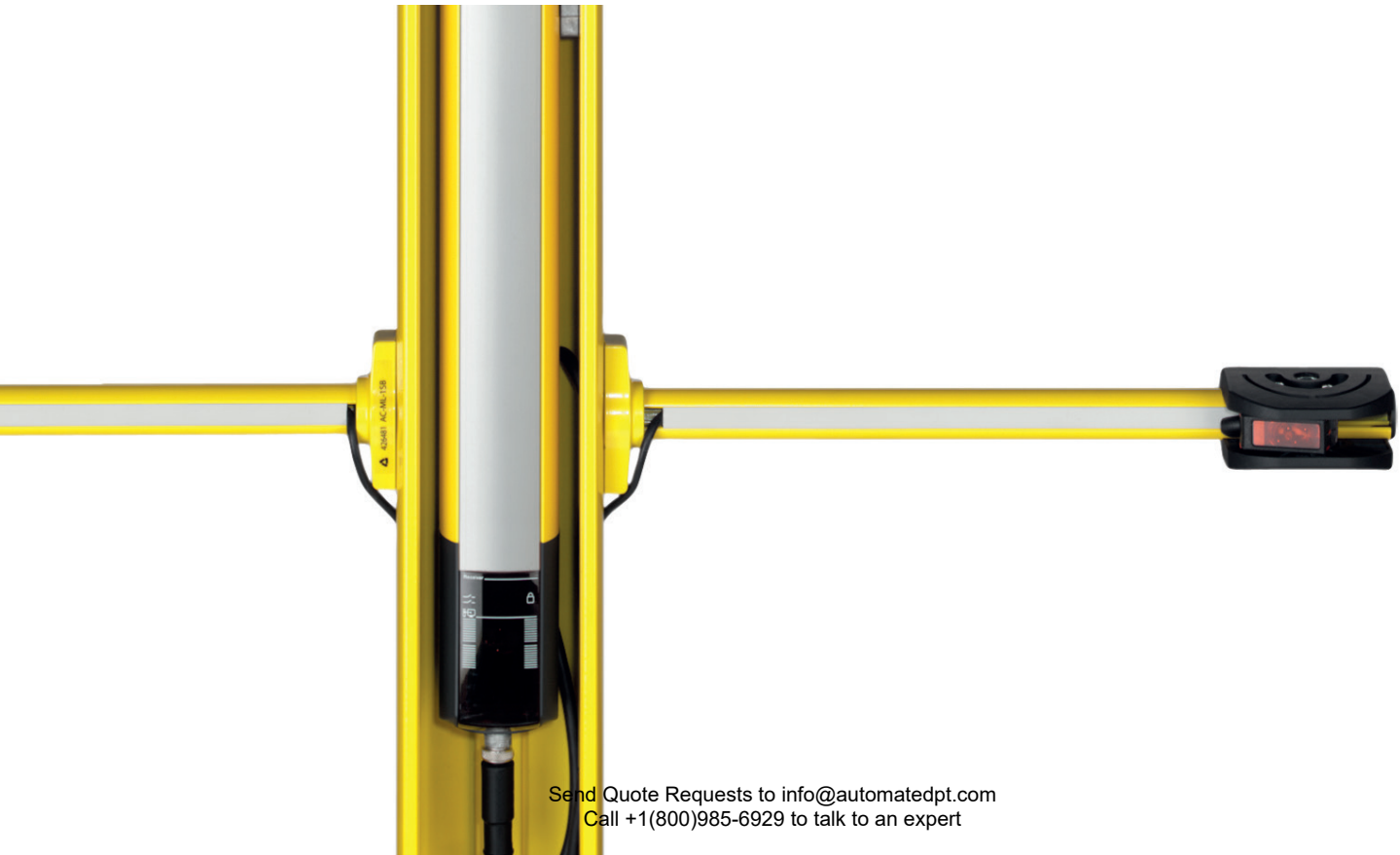

Single light beam safety devices

				
		MLD 500 Type 4 single light beam safety devices	**SLS 46C** Type 4 single light beam safety devices	**SLS 46C** Type 2 single light beam safety devices
Specifications	Type in accordance with EN IEC 61496	Type 4 (self-monitoring)*	Type 4 in combination with a MSI-TRM safety relay	Type 2 in combination with a safety monitoring device
	Operating range	0.5 … 70 m 20 … 100 m	0.25 … 40 m 5 … 70 m	0.5 … 40 m 5 … 70 m
	Operating voltage U_B	+24 V DC ± 20 %	24 V DC, ± 20 % (incl. residual ripple)	24 V DC, ± 20 % (incl. residual ripple)
	Operating temperature	–30 … +55 °C	–30 … +60 °C	–30 … +60 °C
	Dimensions, W × H × D	52 × 65 × 193 mm	20.5 × 77 × 44 mm	20.5 × 77 × 44 mm
	Housing	Metal	Plastic	Plastic
	Light source	Infrared	Red light / infrared	Red light / infrared
	Switching outputs	2 PNP transistor outputs (OSSDs)	2 push-pull transistor outputs	2 push-pull transistor outputs
	Connection type	M12 AS-i Safety interface	Cable 2 m M12	Cable 2 m M12
	Certifications	CE, TÜV, SP, TÜV	CE, c UL us, TÜV, ECOLAB	CE, c UL us, TÜV, ECOLAB
Functions		Start/restart interlock (RES), selectable | Contactor monitoring (EDM), selectable | 2-sensor muting (timing controlled, sequence controlled) | Muting-timeout extension to up to 100 hours | Configurable operating modes | 7-segment display	LED indicator | Activation input for test and series connection | Active ambient light suppression (*A*²LS) | Diagnostic output	LED indicator | Activation input for test and series connection | Active ambient light suppression (*A*²LS) | Diagnostic output
Properties		Integrated muting function, no additional muting module is necessary | The configuration is simply performed by means of wiring, i. e. no software, PC or DIP switch are necessary | The use at ambient temperatures as low as –30 °C is possible | Degree of protection IP 67	Single beam safety device with high function reserve | Compact plastic housing with degree of protection IP 67 | Clearly visible alignment indicator in the front screen | ECOLAB	Single beam safety device with high function reserve | Compact plastic housing with degree of protection IP 67 | Clearly visible alignment indicator in the front screen | ECOLAB

* For safety classification see MLD 500 multiple light beam safety device

Safety radar systems

		LBK with I/O controller (LBK-C22-LZ)	LBK with PROFIsafe controller (LBK-ISC-Bus-PS)
General	SIL in accordance with EN IEC 62061 (SILCL)	SIL 2	SIL 2
	Performance Level (PL) in accordance with EN ISO 13849-1	PL d	PL d
	Category in accordance with EN ISO 13849-1	Category 2	Category 2
	Operating principle	FMCW (frequency modulated continuous wave) for movement detection	FMCW (frequency modulated continuous wave) for movement detection
	Response time	100 ms	100 ms
	Temperature range	–30 °C … +60 °C	–30 °C … +60 °C
	Certifications	IMQ CE	TÜV CE
Sensor	Operating range	0 … 4 m	0 … 4 m
	Adjustable protective field and warning field size	1 … 4 m	1 … 4 m
	Angle of radiation	Wide: 110° (horizontal plane) 30° (vertical plane) Narrow: 50° (horizontal plane) 15° (vertical plane)	Wide: 110° (horizontal plane) 30° (vertical plane) Narrow: 50° (horizontal plane) 15° (vertical plane)
	Frequency range	24.0 … 24.5 GHz	24.0 … 24.5 GHz
	Emitted power	≤ 13 dBm	≤ 13 dBm
	Dimensions (W × H × D)	85 × 85 × 53 mm	85 × 85 × 53 mm
	Connection	M12, 5-pin	M12, 5-pin
	Supply voltage	Via controller	Via controller
	Degree of protection	IP 67	IP 67
Controller	Safety-related switching outputs	Relay output, 2-channel	PROFIsafe, 2 PNP transistor outputs (OSSDs)
	Signal outputs	2 relay outputs	Via PROFINET
	Inputs	3 (2-channel)	2 (2-channel)
	Number of sensors in a system	6	6
	Number of configurable groups (1 to 6 sensors)	3	2
	Deactivation of individual groups	X	X
	Switchable configurations	–	32
	Start / restart interlock (RES)	X	X
	Dimensions (W × H × D)	166.25 × 92.6 × 46.5 mm	90 × 60 × 110 mm
	Degree of protection	IP 20	IP 20
	Interfaces for configuration and diagnosis	USB 2.0 Micro USB	Ethernet TCP/IP USB 2.0

AS-i-safety product range

		 **MLC 510 / AS-i** Type 4 safety light curtains	 **MLD 500 / AS-i** Type 4 multiple light beam safety devices	 **MLD 500 / AS-i** Type 4 single light beam safety devices
Specifications	Type in accordance with EN IEC 61496	Type 4	Type 4	Type 4
	SIL in accordance with IEC 61508 and EN IEC 62061 (SILCL)	SIL 3	SIL 3	SIL 3
	Performance Level (PL) in accordance with EN ISO 13849-1	PL e	PL e	PL e
	AS-i profile	Safe slave	Safe slave	Safe slave
	Slave address	1 … 31, programmable (factory setting = 0)	1 … 31, programmable (factory setting = 0)	1 … 31, programmable (factory setting = 0)
	Connection type	M12	M12	M12
	Current consumption from AS-i circuit	50 mA (transmitter) 150 mA (receiver)	50 mA (transmitter) Max. 140 mA (receiver, type-dependent)	50 mA (transmitter) Max. 140 mA (receiver, type-dependent)
	Sensor response time	3 … 39 ms (type-dependent)	25 ms	25 ms
	Restart delay time	100 ms or 500 ms	100 ms or 500 ms	100 ms or 500 ms
	Certifications	CE, TÜV, CSA, TÜV	CE, TÜV, CSA, TÜV	CE, TÜV, CSA, TÜV
Function extension with ASM1 / ASM1E safety monitor		Start/restart interlock, selectable | Contactor monitoring (EDM), selectable	Start/restart interlock (RES), selectable | Contactor monitoring (EDM), selectable | 2-sensor muting (timing controlled, sequence controlled), 4-sensor muting (timing controlled) | Muting-timeout extension	Start/restart interlock (RES), selectable | Contactor monitoring (EDM), selectable | 2-sensor muting (timing controlled, sequence controlled), 4-sensor muting (timing controlled) | Muting-timeout extension
Properties		Integrated AS-i interface for direct M12 connection to the AS-interface network | Safe data transfer of the OSSD signals via AS-interface | Device swap-out without PC via SERVICE function of the AS-i safety Monitor | Direct control without unique AS-i address possible | Also available as host/middle-guest/ guest variants	Integrated AS-i interface for direct M12 connection to the AS-interface network | Safe data transfer of the OSSD signals via AS-interface | Device swap-out without PC via SERVICE function of the AS-i safety Monitor | Integrated muting indicator, integrated status indicator, direct control without unique AS-i address possible	Integrated AS-i interface for direct M12 connection to the AS-interface network | Safe data transfer of the OSSD signals via AS-interface | Device swap-out without PC via SERVICE function of the AS-i safety Monitor | Direct control without unique AS-i address possible

			
		ASM1 / ASM1E AS-i safety monitors category 4	**ASM2 / ASM2E** AS-i safety monitors category 4
Specifications	SIL in accordance with IEC 61508 and EN IEC 62061 (SILCL)	SIL 3	SIL 3
	Performance Level (PL) in accordance with EN ISO 13849-1	PL e	PL e
	Safety category in accordance with EN ISO 13849-1	4	4
	Stop category in accordance with EN IEC 60204-1	0 and 1	0 and 1
	Supply voltage	24 V DC, ±15 %	24 V DC, ±15 %
	System reaction time	Max. 40 ms (monitor without sensor reaction time)	Max. 40 ms (monitor without sensor reaction time)
	Degree of protection	IP 20	IP 20
	Number of safety monitors per AS-interface network	4 (with maximum 31 integrated AS-i slaves)	4 (with maximum 31 integrated AS-i slaves)
	Certifications	CE c UL us	CE c UL us
Functions		E-Stop monitoring functions | Start/restart interlock, selectable | Dynamic contactor monitoring (EDM), selectable | Muting | Timing controlled 2-sensor muting | Sequence controlled 4-sensor muting | 1 and 2-channel OSSD relay outputs | Status LED indicator | System signal output	E-Stop monitoring functions | Start/restart interlock, selectable | Dynamic contactor monitoring (EDM), selectable | Muting | Timing controlled 2-sensor muting | Sequence controlled 4-sensor muting | 1 and 2-channel OSSD relay outputs | Status LED indicator | System signal output
Properties		Up to 31 safe AS-i slaves can be connected | Freely selectable assignment (Drag&Drop) of the sensors to OSSDs with “asimon” PC software | 32 logic devices (e.g. OR, AND, FLIPFLOP) and turn on/off delays can be configured for the monitoring devices | RS 232 interface for PC-supported system configuration and system diagnosis as well as configuration data transfer to replacement device | Immediate switch-off STOP 0 and delayed switch-off STOP 1 of the release circuits can be configured | Teach-in SERVICE button for automatic system integration of AS-i sensors on sensor exchange	Safe activation of safe AS-i actors with the same safe AS-i address | Primary start and E-Stop functions via safe coupling of neighboring AS-i networks | 48 logic devices (e.g. OR, AND, FLIPFLOP) and turn on/off delays can be configured for the monitoring devices | Auxiliary signals for start/restart interlock | Error reset of the AS-i actor | In addition, all functions and features of the ASM1E safety monitor are available

Safety switches

				
		S20, S200 Safety switches	**S300** Safety position switches	**S400, S410** Safety hinge switches
Specifications	Type	Type 2 interlock device without guard interlocking in acc. with EN ISO 14119	Type 1 interlock device without guard interlocking in acc. with EN ISO 14119	Type 1 interlock device without guard interlocking in acc. with EN ISO 14119
	Housing / Degree of protection	Technopolymer (S20) or metal (S200) / both IP 67	Technopolymer or metal, both IP 67	Metal, IP 67 / IP 69K
	Actuator	Mechanical tongue, with low coding level in accordance with EN ISO 14119	Actuated by unencoded cam in accordance with EN ISO 14119	Position switch encapsulated within the hinge
	Connection type	Cable entry M20 × 1.5 (S20: optional 3-way), M12	Cable entry M20 × 1.5 (1- or 3-way), M12	Cable or M12, top, bottom, at wall side
	Certifications	CE c UL us	CE c UL us	CE c UL us
Functions		Safety switches with separate actuator are ideally suited for safe-guarding points of operation by guards on machines without overrun | The coded actuator allows the machine to be started only if protective device is closed	Because of their construction design, these switches are used for the position monitoring of machines or as an alternative to hinge switches – always with the prerequisite that appropriate actuation tappets or notches can actuate the switch when friction closed	The safety hinge switches unite the safety switch and door hinge functions in one component | They are used in guards and points of operation without overrun | The elegant design makes possible discreet and effective integration in the system
Properties		Metal or technopolymer housing | Easy mounting with standard construction | Universal use with 5 actuator approach directions | Up to 8 different actuators | Various contact blocks | 1–3 cable inlets | Versions with M12 connector | High-quality silver contacts for long life expectancy | Positive-opening contacts for integration in a safety circuit	Metal or technopolymer housing | Switching direction selectable | Universal use with individually set actuator approach directions and angles in 10° grid | Various actuators | Extremely durable / robust | Positive-opening contacts for integration in a safety circuit	Metal housing (IP 67/IP 69K) | Hidden cable routing thanks to connection on rear side | High protection against tampering through encapsulated position switch | Adjustable switching point | 180 ° maximum opening angle of the protective device | Positive-opening contacts for integration in a safety circuit | Model S410 with wide fork dimension for special materials, e.g., glass | Additional hinge (without contacts)

Safety locking devices

				
		L10, L100, L200 Safety locking devices	**L250** Safety locking devices	**L300** Safety locking devices
Specifications	Type	Type 2 interlock device with guard interlocking in acc. with EN ISO 14119	Type 4 interlock device with guard interlocking in acc. with EN ISO 14119	Type 4 interlock device with guard interlocking in acc. with EN ISO 14119
	Housing / Degree of protection	Technopolymer or metal / both IP 67	Technopolymer IP 67 / IP 69K	Metal, IP 67 / IP 69K, IP 65 for integrated operational controls
	Actuator	Mechanical tongue, with low coding level in accordance with EN ISO 14119	Mechanical tongue with RFID-encoded actuator in accordance with EN ISO 14119; AC-L250-SCA: low, AC-L250-UCA: high	Mechanical tongue with RFID-encoded actuator in accordance with EN ISO 14119; AC-L300-SCA: low, AC-L300-UCA: high
	Locking type, -force	With either quiescent current principle or open circuit current principle L100: F_{1max} 1,100 N acc. to ISO 14119 L200: F_{1max} 2,800 N acc. to ISO 14119	With either quiescent current principle or open circuit current principle F_{1max} 2,100 N acc. to ISO 14119	With either quiescent current principle or open circuit current principle F_{1max} 9,750 N acc. to ISO 14119
	Connection type	Cable entry M20 × 1.5 (3-way)	M12 connector, various outgoing lines	Cable entry M20 × 1.5 (3-way), M12 (8- or 12-pin), M23 (19-pin)
	Certifications	CE, c UL us	CE, c UL us, TÜV, ECOLAB	CE, c UL us, TÜV, ECOLAB
Functions		Safety locking devices keep protective doors securely locked and thereby prevent the inadmissible access of people until the guarded machine no longer poses a danger | In addition, safety locking devices are also used for process protection	Safety locking devices keep protective doors securely locked and thereby prevent the inadmissible access of people until the guarded machine no longer poses a danger | In addition, safety locking devices are also used for process protection	Safety locking devices keep protective doors securely locked and thereby prevent the inadmissible access of people until the guarded machine no longer poses a danger | In addition, safety locking devices are also used for process protection
Properties		Universal use with 5 actuator approach directions | Multiple heavy-duty actuators for a wide range of installation conditions | Positive-opening contacts for integration in the safety circuit | Models with escape release button (L200) | Status LED indicator (L200)	Compact design | Flexible mounting concept | Contactless actuation through RFID technology | OSSD safety-related switching outputs | Locking force of the actuator 2,100 N | Large center opening for actuator shaft | Flexibly mounted actuator enables secure closing even with warped doors | Status LED indicator for fast diagnosis | Models with and without escape release button	Contactless actuation through RFID technology | OSSD safety-related switching outputs | Locking force of the actuator 9,750 N | Large center opening for actuator shaft | Flexibly mounted actuator enables secure closing even with warped doors | Status LED indicator for fast diagnosis | Models with and without escape release button | Models with up to three integrated operational controls | Lock-out/tag-out functionality | Turnable actuator introduction for all installation positions | Optional door handle for simple mounting of switches and actuators

Safety proximity sensors

		MC 300 Magnetically coded sensors	**RD 800** Safety transponders
Specifications	Type	Type 4 interlock device, contactless actuation in accordance with EN ISO 14119	Type 4 interlock device, contactless actuation in accordance with EN ISO 14119
	Category in accordance with EN IEC 13849-1	Up to 4 (depending on the number of sensors)	4
	Performance Level (PL) in accordance with EN ISO 13849-1	Up to e (depending on the number of sensors)	e
	Dimensions (housing)	M30 × 36 mm (MC 330) 36 × 26 × 13 mm (MC 336) 88 × 25 × 13 mm (MC 388)	87.5 × 25 × 18 mm (sensor) 45 × 25 × 18 mm (actuator)
	Assured switching distances (Sao, Sar)	< 6 mm, > 14 mm (MC 330) < 3 mm, > 11 mm (MC 336) < 6 mm, > 30 mm (MC 388)	12 mm, 10 mm
	Switching tolerance	± 1 mm	
	Contact type	2 NC or 1 NC + 1 NO	OSSD safety outputs
	Code type	Actuator with low coding level in accordance with EN ISO 14119	Actuator with low and high coding level in accordance with EN ISO 14119
	Connection type	M8, M12, cable, cable+M12	M12, cable
	Min. approach speed of actuator towards sensor	50 mm/s	
	Response time	3 ms	7 ms (typical), 12 ms (max.)
	Certifications	CE c UL us TÜV	CE c UL us TÜV
Functions		The magnetically coded sensors are used for monitoring guards | Together with a safe evaluation unit from Leuze, a certified system up to category 4 and PL e in accordance with EN ISO 13849-1 can be realized	The sensors of the RD 800 series are used for monitoring guards | The unique encoding of the actuator, made possible through RFID technology, offers maximum protection against tampering | The sensors are equipped with redundant electronics and OSSD safety outputs
Properties		Contactless actuation without mechanical contacts | Output contacts: 2 NC or 1 NC + 1 NO | Models with additional signal contact and status LED | Models with cable, M8 or M12 connector | Various compact designs | Simple commissioning | Insensitive to soiling | Degree of protection IP 67	Long life expectancy, even with frequent operating cycles thanks to contactless actuation | Maximum protection against tampering by means of an actuator with low or high coding level in accordance with EN ISO 14119 | Redundant electronics and OSSD safety outputs for the highest safety level | PL e and category 4 in accordance with EN ISO 13849-1 beginning with one device | Series connection possible | Status display on the sensor and signal contact | Models with cable or M12 connector | Models with additional programming input for teaching-in actuators | Degree of protection IP 67 and IP 69K

Safety command devices

		ERS 200 E-Stop rope switch	**ESB 200** E-Stop button
Specifications	Type	E-Stop command device in accordance with EN ISO 13850, EN 60947-5-5	E-Stop command device in accordance with EN ISO 13850, EN 60947-5-5
	Housing / Degree of protection	Metal, IP 67	UV-resistant, impact-resistant plastic, IP 67, IP 69K
	Actuator	Stainless steel bolt, red, steel rope with sheathing	Button, 40 mm diameter, red, self-locking
	Actuation	Position-independent per rope (pull: 83 N / 235 N, slacken: 63 N / 147 N). Pull on forced separation: 90 N / 250 N.	Position-dependent, manual, per button (25 N)
	Mounting	Straight, angular	Structure
	Connection type	Cable entry M20 × 1.5 (1- or 3-way), M12	Cable entry M20 × 1.5, M16 × 1.5 M12
	Certifications	CE c UL us	CE
Functions		Integration in control circuits up to category 4 in accordance with EN ISO 13849-1 | Position-independent E-Stop command input | Reset function (reset button with indicator) | Rope head with alignment indicator	Integration in control circuits up to category 4 in accordance with EN ISO 13849-1 | Position-dependent E-Stop command input | Reset function (via rotary knob or key)
Properties		Machine is stopped by pulling the rope or on rope breakage | Simple rope alignment though switching point indicator | Clicks in on both sides with friction-locking contacts | Compact metal housing | Use even under difficult conditions | Precise bolt guide	2 safety circuits, 1 signal circuit | Either screw terminals or M12 connection | Sturdy housing | Protected screw fitting | Ergonomically optimized

Safety at Leuze

Safety relays

		MSI-SR-2H21	MSI-SR-ES31	MSI-MC310
Specifications	Device type / function	Evaluation unit	Evaluation unit	Evaluation unit
	Category / Performance Level (PL) in accordance with EN ISO 13849-1	4 / PL e	3 / PL d	4 / PL e
	SIL in accordance with IEC 61508 and EN IEC 62061 (SILCL)	SIL 3 / SIL_{CL} 3	SIL 2 / SIL_{CL} 2	SIL 3 / SIL_{CL} 3
	Number of release contacts (NO contact)	2	3	2
	Number of signal contacts (NC contact)	1	1	1
	Start / restart	Through synchronous actuation	Automatic, manual	Automatic, manual
	Contactor monitoring (EDM)	X	X	X
	Regression delay	50 ms	60 ms	20 ms
	Max. continuous current per path	6 A	8 A	3 A
	Ambient temperature, operation	–25 ... +55 °C	–25 ... +55 °C	0 ... +55 °C
	Dimensions with screw terminals (W × H × D)	96.5 × 22.5 × 114 mm	96.5 × 22.5 × 114 mm	96.5 × 22.5 × 113.6 mm
	Certifications	CE c UL us TÜV Rheinland FS	CE c UL us TÜV Rheinland FS	CE c UL us TÜV Rheinland FS
Sensors/ application		Two-hand control device type III C, EN 574	E-Stop, safety switches with relay contacts	Safety solenoid switches Inputs: 1 NC contact, 1 NO contact
Properties		With either pluggable screw terminals or with spring-cage terminals | Push-in available	With either pluggable screw terminals or with spring-cage terminals | Push-in available	With either pluggable screw terminals or with spring-cage terminals | Push-in available

			
MSI-SR-LC21	**MSI-SR-LC31AR** **MSI-SR-LC31MR**	**MSI-SR4B** **MSI-SR5B**	**MSI-SR-LC21DT03** **MSI-SR-LC21DT30** **MSI-DT30**
Evaluation unit	Evaluation unit	Evaluation unit	Evaluation unit with time delay
4/PL e	4/PL e	4/PL e	4/PL e LC21: 3/PL d for delayed contact
SIL 3/SIL_{CL} 3	SIL 3/SIL_{CL} 3	SIL 3/SIL_{CL} 3	SIL 3/SIL_{CL} 3 2/SIL_{CL} 2 for delayed contact
2	3	3 2	LC21: 2 + 1 delayed 2 + 2 delayed
1	1	1 –	
Automatic, manual	Automatic (AR), manual (MR)	Automatic, manual	Automatic, manual
X	X	X	X
25 ms	10 ms	10 ms	LC21: 25 ms 20 ms
6 A	8 A	3 A 2 A	6 A 6 A
–25 ... +55 °C	–25 ... +65 °C	0 ... +55 °C	–25 ... +55 °C –20 ... +55 °C
96.5 × 22.5 × 114 mm	96.5 × 22.5 × 114 mm	99.5 × 22.5 × 111.5 mm	96.5 × 22.5 × 114 mm 96.5 × 22.5 × 111.5 mm
CE c UL us TÜV FS	CE c UL us TÜV FS	CE c UL us TÜV TÜV	CE c UL us TÜV FS
E-Stop safety switches: – with relay contacts – with OSSD outputs – with reed contacts Safety light curtain Safety laser scanner	E-Stop safety switches: – with relay contacts – with OSSD outputs – with reed contacts Safety light curtain Safety laser scanner	E-Stop safety switches: – with relay contacts – with OSSD outputs – with reed contacts Safety light curtain Safety laser scanner	E-Stop safety switches: – with relay contacts – with OSSD outputs Safety light curtain Safety laser scanner
With either pluggable screw terminals or with spring-cage terminals | Push-in available	With either pluggable screw terminals or with spring-cage terminals | Push-in available	SR5: 2 inputs (1- or 2-channel) for parallel evaluation of 2 sensors | With either pluggable screw terminals or with spring-cage terminals | Push-in available	Delay 0.15 – 3 s (MSI-SR-LC21DT03) | Delay: 1.5 – 30 s (MSI-SR-LC21DT30) | Delay 0.1 – 30 s (MSI-DT-30)

Safety at Leuze

Safety relays

		 MSI-RM2B MSI-SR-CM32	 MSI-SR-CM42R
Specifications	Device type / function	Output extension for OSSDs	Contact extension
	Category / Performance Level (PL) in accordance with EN ISO 13849-1	4 / PL e	4 / PL e
	SIL in accordance with IEC 61508 and EN IEC 62061 (SILCL)	SIL 3 / SIL_{CL} 3	SIL 3 / SIL_{CL} 3
	Number of release contacts (NO contact)	2 (change-over contact) 3	2 × 2
	Number of signal contacts (NC contact)	1 2	2 × 1
	Start / restart	Automatic	Automatic
	Contactor monitoring (EDM)		
	Regression delay	10 ms 20 ms	15 ms
	Max. continuous current per path	3 A 6 A	6 A
	Ambient temperature, operation	0 ... +50 °C –25 ... +55 °C	–25 ... +65 °C
	Dimensions (with screw terminals)	99 × 17.5 × 111.5 mm 96.5 × 22.5 × 114 mm	96.5 × 22.5 × 114 mm
	Certifications	CE c UL US TÜV CE c UL US	CE c UL US TÜV
Sensors/ application		Safety light barrier Safety laser scanner Safety switch with OSSD outputs Additionally for CM 32: extension for safety PLCs	Extension for safety relays and safety PLCs
Properties		With either pluggable screw terminals or with spring-cage terminals | Push-in available	2 extensions in one device | With either pluggable screw terminals or with spring-cage terminals | Push-in available

			
MSI-SR-CM43	**MSI-CM52B**	**MSI-TR1B/2B** **MSI-TRMB**	**MSI-MD-FB**
Contact extension	Contact extension	Evaluation unit for periodic testing	Muting controller
3/PL d	4/PL e	4/PL e	4/PL e
SIL 2/SIL_{CL} 2	SIL 3/SIL_{CL} 3	SIL 3/SIL_{CL} 3	SIL 3/SIL_{CL} 3
4	5	2	OSSD pair
3	2	2 (semiconductor)	–
Automatic	Automatic	Automatic, manual	Automatic, manual
		X	
40 ms	20 ms	20 ms 130 ms	
6 A	6 A	3 A	
–25 ... +55 °C	–20 ... +55 °C	–30 ... +60 °C –25 ... +55 °C	–30 ... +60 °C
96.5 × 22.5 × 114 mm	96.5 × 22.5 × 114.5 mm	99 × 22.5 × 111.5 mm	225 × 60 × 37 mm
CE c UL us, TÜV, FS	CE c UL us, TÜV	CE c UL us, TÜV; CE TÜV (in combination with SLS 46C)	CE c SP us, TÜV
Extension for safety relays and safety PLCs	Extension for safety relays and safety PLCs	Testable optoelectronic protective devices of type 2 (MSI-TR1/2) Testable optoelectronic protective devices of type 4 (MSI-TRM)	Single light beam safety devices Multiple light beam safety devices Safety light curtains, each with muting sensors
With either pluggable screw terminals or with spring-cage terminals | Push-in available	With either pluggable screw terminals or with spring-cage terminals | Push-in available	1 or 2 input circuits, up to 3 sensors each | Filter time 130 ms (TR2) | With either pluggable screw terminals or with spring-cage terminals | Push-in available	

Safety at Leuze

Programmable safety controls

		MSI 410
Specifications	Device type / function	Safety control base module
	Category / Performance Level (PL) in accordance with EN ISO 13849-1	4 / PL e
	SIL in accordance with IEC 61508 or EN IEC 62061 (SILCL)	3
	Inputs / outputs / Inputs or outputs, configurable	20 / 4 / –
	Maximum switching power per output	4 A
	Test outputs / signal generators	4 / 4
	Interfaces	USB mini
	Fieldbus protocols	
	Supply voltage	16.8 … 30 V DC
	Ambient temperature, operation	
	Dimensions	45 × 96 × 115 mm
	Certifications	CE c UL us
Functions		40 certified function blocks | Expandable to up to 116 safe inputs / 56 safe outputs and 2 gateway modules | F50 model with special function blocks for press control and safe movement monitoring, such as SLS, SSM, SSR acc. to EN61800-5-2
Properties		Configuration via MSI.designer configuration software (license-free): supports up to 300 function blocks in one project, integrated simulation with logic analyzer, configurable report, online diagnosis | Removable program memory in SD card format, 512 MB | Designs with screw or spring-cage terminals

MSI.designer

- Easy hardware configuration
- Simple logic programming
- Simulation and logic analysis for testing the safety function right from a PC
- Force mode for detailed function tests
- Configurable report for professional and well-organized documentation
- Online diagnosis for a fast state overview, including remote maintenance

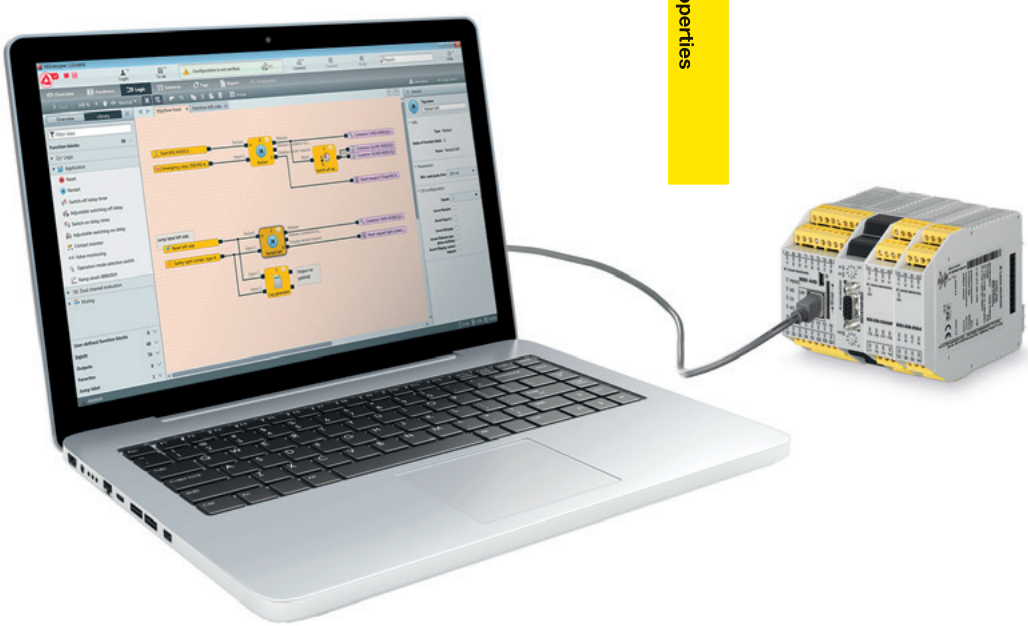

			
MSI 420 **MSI 430**	**MSI-EM-I8** **MSI-EM-I084**	**MSI-EM-IO84NP**	**MSI-FB-EtherCAT** **MSI-FB-PROFIBUS** **MSI-FB-CANopen**
Safety control base module	Safe extension module	Non-safe extension module	Gateway
4 / PL e	4 / PL e		
3	3		
16 / 4 / 4	8 / – / – 8 / 4 / –	4 / 4 / 4	
4 A	4 A	0.5 A	
4 / 4	8 / 2 (EM-I8) 2 / 2 (EM-IO84)		
USB mini, Ethernet TCP/IP			2x RJ45 socket 1x RS485 (Sub-D) screw terminal, 5-pin
MSI 430: PROFINET IO, EtherNet/IP and Modbus TCP integrated			EtherCAT PROFIBUS-DP CANopen
16.8 … 30 V DC	16.8 … 30 V DC	16.8 … 30 V DC	Via base module
45 × 96 × 115 mm	22.5 × 93.7 × 120.8 mm	22.5 × 93.7 × 120.8 mm	22.5 × 96.5 × 121 mm
CE c UL us TÜV FS	CE c UL us TÜV FS	CE c UL us TÜV FS	CE c UL us
40 certified function blocks | Expandable to up to 116 safe inputs / 56 safe outputs and 2 gateway modules | F50 model with special function blocks for press control and safe movement monitoring, such as SLS, SSM, SSR acc. to EN61800-5-2	Safe extension modules | Each base module can be expanded by up to 12 freely selectable extension modules	Non-safe extension modules for economical actuation of non-safety relevant elements (e.g., signal lights) | Each base module can be expanded by up to 12 freely selectable extension modules	Each base module can be expanded with up to 2 gateway modules
Configuration via MSI.designer configuration software (license-free): supports up to 300 function blocks in one project, integrated simulation with logic analyzer, configurable report, online diagnosis | Removable program memory in SD card format, 512 MB | Designs with screw or spring-cage terminals	Designs with screw or spring-cage terminals	Designs with screw or spring-cage terminals	

Safety solutions
Maximum safety with maximum efficiency

With increasing automation, classic safety concepts such as muting are often pushed to their limits. Today there is a need for new safety concepts that meet the extended requirements. Concepts that also offer gapless safety for automatic processes – and at the same time guarantee an efficient material flow as well as high system availability.

Your partner for efficient safety solutions

Our innovative safety solutions are the result of years of experience and our sound safety know-how. For more than 30 years, we have been supporting safety-related applications in different industries by offering a broad range of products. Our safety experts have comprehensive knowledge of the latest norms and standards and extensive experience in designing safety concepts.

In the project, our professional project teams accompany you from the gathering of the requirements to the safety acceptance. They make sure that the safety solution meets your requirements and ensure that the projects run smoothly.

Advantages for you

- The pre-designed safety solutions are individually tailored to your application. This saves time and money and guarantees optimum safety.
- Our innovative, intelligent safety concepts ensure gapless safety and smooth-running processes – even in areas where classic concepts are pushed to their limits.
- Our project team with certified safety experts accompany you from the gathering of the requirements to the safety acceptance.

Tailored to your needs

Our solutions are based on qualified safety concepts which, if necessary, can also be extended or created new.
Every solution is individually tailored to your system layout and includes
- All necessary hardware and software components
- Engineering services, such as configuration according to project requirements
- Start-up support
- Validation of the safety function
- Full documentation

The path to your solution

1 Gather requirements
- Examine layout and danger zones, clarify processes
- Check risk assessment, define protective goals
- Clarify timing

2 Selection of the safety concept
- Evaluation of the requirements by our safety experts
- Selection of the appropriate safety concept and the required components

3 Configuration & parameterization
- Configuration of the safety system
- Programming and parameterization according to requirements
- Project-specific documentation

4 Installation & commissioning
- Provision of the mounting and installation instructions
- Mounting and installation of the system components
- Support during commissioning and the integration in the control

5 Safety inspection & acceptance
- Validation of the safety function
- Initial inspection of the safety devices
- Creation of the acceptance documentation

Safety solutions – examples

Access guarding on multi-track transport systems

Requirement:
Pallets are output on individual tracks that are fed via a cross conveyor. The cross conveyor and the area located behind it are to be safeguarded against entry by persons.
The protection should only release the track on which the pallet is output.

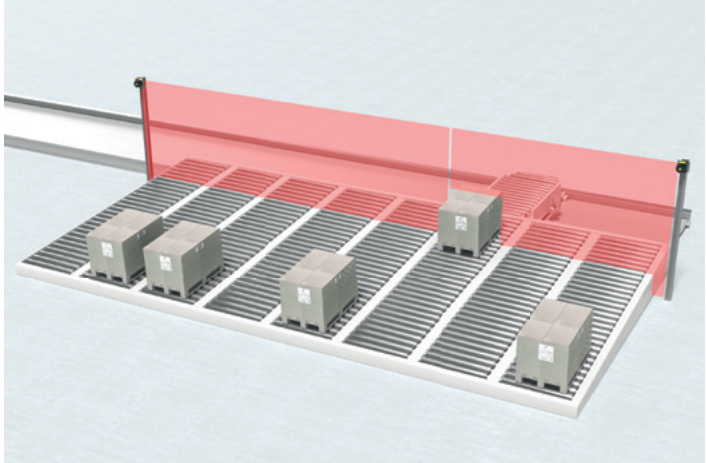

Solution concept:
Access guarding takes place via two vertically oriented safety laser scanners. From the system control, the safety system receives the information about the track onto which the pallet is output and adapts the protective field for the passage of the pallet accordingly. The entire process is monitored for safety.

Advantages

- Continuous monitoring of the entire transfer area for up to 10 tracks and width of up to 9 m
- Gapless safety during the transport cycles
- High reliability and availability
- Optimum protection against manipulation
- No additional trigger sensors necessary
- Easily retrofittable

System components and safety parameters

- Safety sensors: RSL 400 safety laser scanner
- System control: MSI 400 safety control
- Leuze safety program
- PL d in accordance with EN ISO 13849-1, SIL 2 in accordance with IEC 61508
- 2-channel safety output

Access monitoring at material transfer station

Requirement:
The robot cell is fed automatically. The material is loaded onto the conveyor line, e.g. using a forklift truck, and then transported into the cell. Access to the cell must be safeguarded.
To guarantee optimum capacity utilization of the robot cell, the safety concept must also allow uninterrupted operation of the cell during loading.

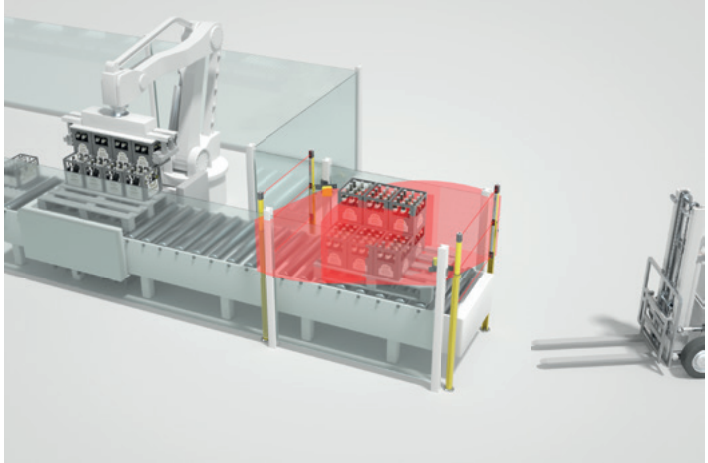

Solution concept:
The loading area of the conveyor line is guarded at both the entry and exit side by multiple light beam safety devices.
The area between the photoelectric sensors is monitored for the presence of persons by means of safety radar sensors.

Advantages

- Higher capacity utilization of the system through interruption-free operation of the robot cell, even during loading
- Infeed of transported goods of any shape or size thanks to an optimized safety concept
- Safe and reliable even under demanding conditions, e.g. with fully loaded or empty pallets
- Supports automatic starting of the conveyor line to improve efficiency and safety
- No operator action required
- No visual monitoring of the danger zone necessary

System components and safety parameters

- Safety sensors: MLD 500 multiple light beam safety devices, LBK safety radar sensors with controller
- System control: MSI 400 safety control
- Leuze safety program
- PL e in acc. with EN ISO 13849-1, SIL 3 in acc. with IEC 61508
- 2-channel safety output, 2 signal outputs

Safety at Leuze

Machine Safety Services

Sustainable machine safety begins with professional planning of the safety systems and spans the entire lifecycle of a machine. Our teams of experienced and certified experts offer the appropriate support here.

Stages of a machine life cycle

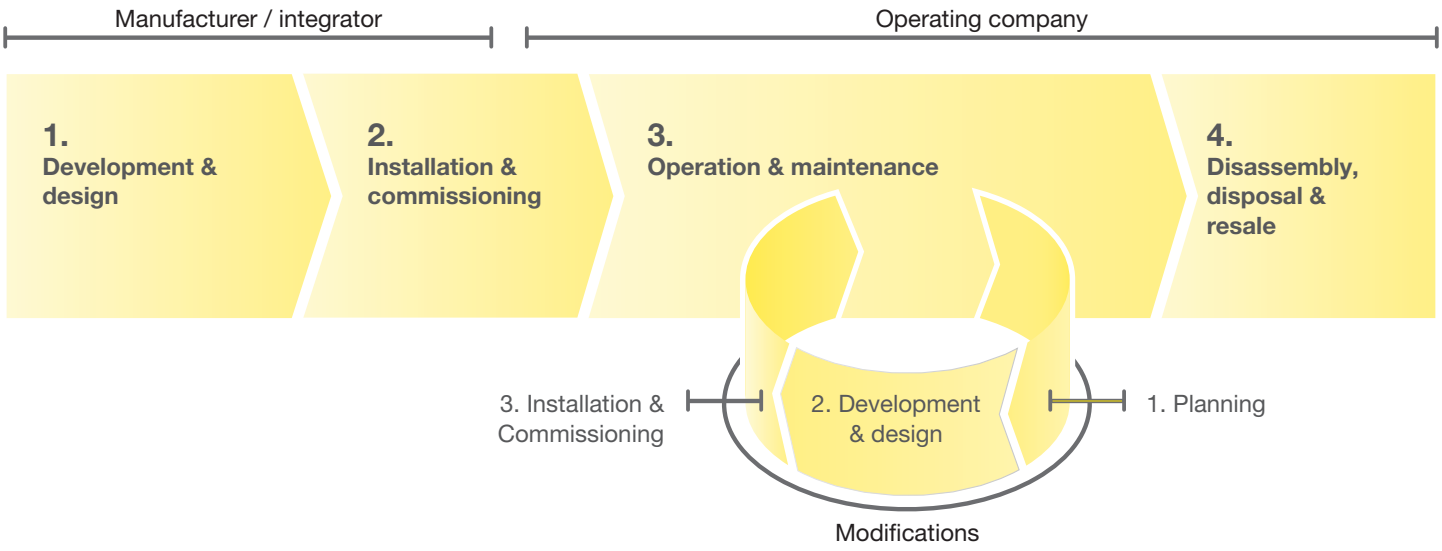

When designing and constructing machines, we create the safety-related concept together with you and support you in its realization.
During operation, we regularly perform tests to ensure the permanent function of the safety systems. If changes are made to existing machines, we provide you with support on everything from the safety-related planning to renewed commissioning.

Through our services, you benefit from our many years of experience in the area of machine safety and our extensive industry and application knowledge. Efficient safety-related solutions for every phase of a machine's life cycle are thereby created together.

Our service offerings

Status check: ‘safety technology on machines and systems’

— Our experts analyze the safety-related condition of your machinery and check whether the current safety-related requirements are satisfied in accordance with the current state of the art.
— In the event of deviations, we provide recommendations on what corrections can be performed so as to comply with legal requirements.

Risk assessment and hazard assessment

In accordance with applicable directives, the manufacturer of a machine is required to perform a risk assessment. This also applies in the case of significant modifications or extensions of machines.

The national regulations for the operation of machines require employers to conduct a hazard assessment before using work equipment and to update this assessment at regular intervals according to the current state of the art.

— Our experts support you in identifying the dangers, in assessing and evaluating the risks as well as in defining the risk-reducing measures.

Inspection of protective devices

— Within the scope of the initial or regular inspection, we check the condition, mounting and correct function of the protective device as well as the correct integration in the safe part of the machine control
— We summarize the results of the tests in a detailed report. If necessary, this includes practically oriented suggestions on how deviations can be corrected.

Stopping time measurement

For the correct placement of the protective device, the required minimum distance between protective device and dangerous movements is to be calculated. To do this, the stopping time of the machine must be known. With the stopping time measurement, we determine this value reliably.

— By measuring the stopping time within the scope of regular inspections, any wear, such in brake components, can be detected in good time.

Status check: ‘CE marking of machines’

During the development of machines, the specifications from the machinery directive must be adhered to and documented by the manufacturer. This is confirmed with the Declaration of Conformity and the CE marking.

— We check the documentation for completeness and give recommendations of how any deviations can be corrected.

Conformity assessment in accordance with the European machinery directive

The machinery directive defines the procedure for the design and construction of machines for satisfying the applicable safety and health protection requirements. This is a prerequisite for the Declaration of Conformity and the CE marking.

— We help you comply with and implement the legal requirements of the machinery directive.

Safety concept and safety design

The measures necessary for risk minimization are known from the risk analysis. The safety concept and the safety functions are developed on the basis of these requirements.

— With our extensive industry knowledge and our many years of safety-related experience, we create practically oriented concept proposals for you and support you during their implementation.

Verification and validation

To avoid errors during the implementation of safety functions, both the hardware as well as the software must be checked to determine whether the requirements of the functional specification were met completely and correctly. The function test of all safety functions is to be performed according to the validation plan.

— We support you during the planning, development and execution of the function tests as well as with the creation of the required documentation.

Identification

Reliably detected: Automatic bar code identification for continuous traceability

In many areas of production and logistics, goods and materials are labeled with bar codes or 2D-codes. They are used for identification in the automation process and simultaneously ensure the traceability of the production and packaging process of every single product.

We offer various technologies for reading these codes: e.g. mobile hand-held scanners for bar codes, 2D-codes or DPM codes, stationary laser scanners in line or raster scanner versions as well as high-speed scanners or scanners for the deep-freeze area with integrated heating.

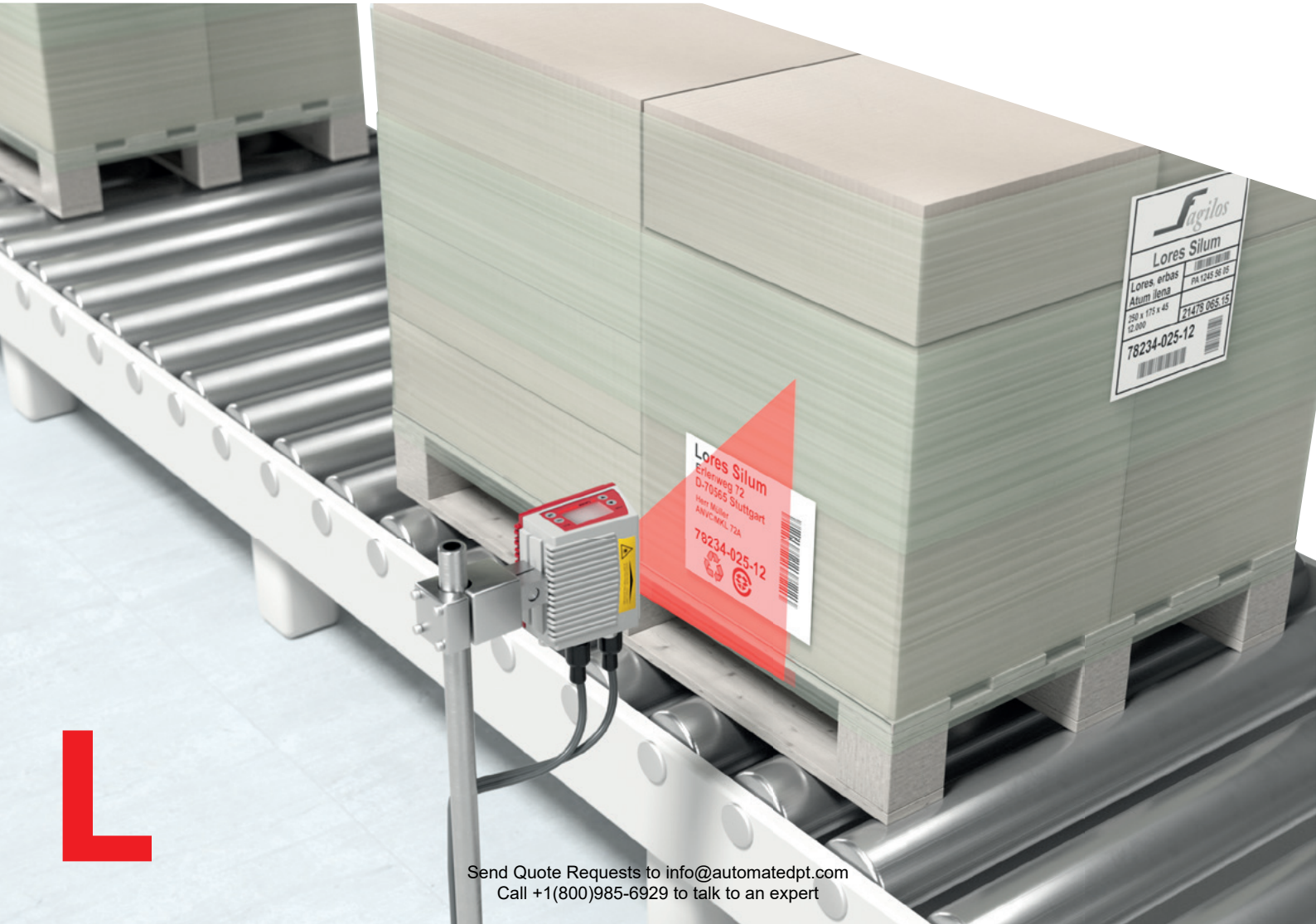

Precise bar code reader: the latest technology and numerous equipment options

For gapless product traceability, automatic identification of 1D- or 2D-codes is essential. The BCL 300i stationary bar code reader is used primarily for the reliable identification of bar codes on containers and packages.

With the innovative code reconstruction technology, even soiled or damaged codes can be reliably detected. This increases system availability.

Through the modular design with many equipment options, the BCL 300i can be adapted flexibly and optimally to your specific application.

BCL 300*i*

- Modular connection technology through pluggable connection hoods
- Integrated fieldbus interfaces, such as PROFINET or Ethernet IP
- Variants as line scanners, raster scanners, deflecting and oscillating mirrors available
- Code reconstruction technology (CRT) for reliable identification of damaged codes
- Optionally with display and heating

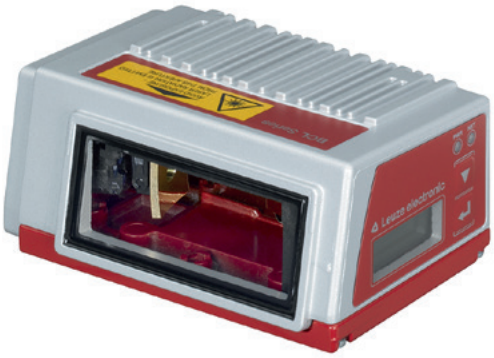

Stationary bar code readers

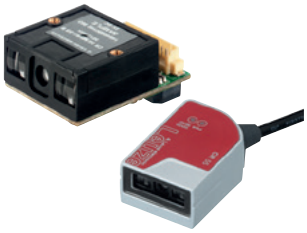

		CR 50 CR 55	CR 100	BCL 8
Specifications	Reading distance (dependent on version)	50 – 230 mm	15 – 67 mm	40 – 160 mm
	Smallest resolution	0.127 mm	0.15 mm	0.125 mm
	Scanning rate	330 scans/s	700 scans/s	600 / 500 scans/s
	Optics models	M	M	N, M
	Reading method	Single line scanner	Single line scanner Deflecting mirror	Single line scanner Deflecting mirror
	Inputs/outputs	1 / 1	1 / 1	1 / 1
	Interfaces	**Integrated:** RS 232 USB	**Integrated:** RS 232 USB	**Integrated:** RS 232
	Connectivity			**With MA 8 connection unit (point to point)** RS 485 **With MA 200i connection unit** PROFINET IO/RT, PROFIBUS, Ethernet TCP/IP, UDP, Ethernet/IP EtherCAT, DeviceNet, CANopen
	Supply voltage	5 V DC	5 V DC	5 V DC (10 – 30 V DC via MA)
	Degree of protection	IP 54	IP 40	IP 67
	Network master			MA 31
	Certifications	CE c UL us	CE c UL us	CE CDRH c UL us
Acces-sories	Optional	MA-CR adapter circuit board for test purposes	MA-CR adapter circuit board for test purposes	
	Mounting devices			BT 8
Properties		Very small construction | Configurable operating modes, including – among others – presentation mode	Large reading field even at close range | Output format selectable | Alignment mode | LED indicator	Reads all common 1D-codes including Pharmacode | Robust industrial version in metal housing – IP 67 | M12 connection type or cable variant | Reference code comparison

			
BCL 92 **BCL 95**	**BCL 148**	**BCL 200i**	**BCL 300i**
25–250 mm	30–310 mm	40–255 mm	20–700 mm
0.15 mm	0.127 mm	0.2 mm	0.127 mm
600 scans/s	750 scans/s	1,000 scans/s	1,000 scans/s
M	Focus adjustment	M	N, M, F, L, J
Single line scanner Deflecting mirror	Single line scanner Deflecting mirror	Single line scanner Raster scanner Deflecting mirror Code reconstruction technology	Single line scanner Raster scanner Deflecting mirror Oscillating mirror Code reconstruction technology
2 / 2 1 / 1	1 / 1	1 / 1	1 / 1
Integrated: RS 232	**Integrated:** RS 232 / 485	**Integrated:** PROFINET IO/RT Ethernet TCP/IP	**Integrated:** RS 232 / 485 / 422 multiNet PROFIBUS PROFINET IO/RT Ethernet TCP/IP, UDP Ethernet IP EtherCAT
			With MA 200i connection unit DeviceNet, CANopen
10–30 V DC / 5V DC	18–30 V DC	18–30 V DC	18–30 V DC
IP 54	IP 65	IP 65	IP 65
			MA 31
CE CDRH c UL us	CE CDRH c UL us	CE CDRH	CE CDRH c UL us
		BT 56, BT 300W, BT 300-1	BT 56, BT 59, BT 300 W, BT 300
Reads all common 1D-codes including Pharmacode | M12 connection type or cable variant | Reference code comparison	Reads all common 1D-codes | Robust industrial version in a metal housing – IP 65 | Connection type: cable tail with connector	Optimized for constrained spaces between the conveyor lines | Integrated fieldbus connectivity | Code reconstruction technology (CRT) | Simple configuration without additional software or GSDML file | Connection type: cable tail with connector	Integrated fieldbus connectivity | Code reconstruction technology (CRT) | Available as a front scanner, deflecting mirror and oscillating mirror model | Simple configuration without additional software via USB interface or GSD/GSDML file | Modular connection type via M12 hood with integrated connectors, terminal hood or cable hood | Optional with display and as heating model

Stationary bar code readers

		BCL 500i	BCL 600i	BCL 900i
Specifications	Reading distance (dependent on version)	200–2,400 mm	300–1,500 mm	450–1,700 mm
	Smallest resolution	0.2 mm	0.25 mm	0.33 mm
	Scanning rate	1,000 scans/s	800–1,000 scans/s	1,000 scans/s
	Optics models	N, M, F, L	M, F	M
	Reading method	Single line scanner Oscillating mirror Code reconstruction technology	Single line scanner Oscillating mirror Code reconstruction technology	Single line scanner Code reconstruction technology
	Inputs/outputs	2 / 2	2 / 2	3 / 2
	Interfaces	**Integrated:** RS 232 / 485 / 422 multiNet PROFIBUS PROFINET IO/RT Ethernet TCP/IP, UDP Ethernet IP	**Integrated:** RS 232 / 485 / 422 multiNet PROFIBUS PROFINET IO/RT Ethernet TCP/IP, UDP	**Integrated:** RS 232 / 422 Ethernet TCP/IP, UDP Ethernet IP
	Connectivity	**With MA 200i connection unit** EtherCAT, DeviceNet, CANopen	**With MA 200i connection unit** EtherCAT, DeviceNet, CANopen	**With MA 900 connection unit** RS 232 / 422, Ethernet TCP/IP, UDP, Ethernet/IP, **With MA 200i connection unit** PROFINET IO/RT, PROFIBUS, EtherCAT, DeviceNet, CANopen
	Supply voltage	10–30 V DC	10–30 V DC	10–30 V DC
	Degree of protection	IP 65	IP 65	IP 65
	Network master	Integrated	Integrated	MA 31
	Certifications	CE CDRH c UL us	CE CDRH c UL us	CE CDRH c SP us
Accessories	Optional			Ext. parameter memory
	Mounting devices	BT 56, BT 59	BT 56, BT 59	BT 900
Properties		"webConfig" software integrated in the device permits configuration via USB interface without additional software | Multiple language menu-driven display | M12 connection type | Integrated fieldbus connectivity for convenient fieldbus link, networking and configuration via the GSD/GSDML file | Code reconstruction technology (CRT) for reliable identification of damaged codes | Optional heating models to –35 °C	"webConfig" software integrated in the device permits configuration via USB interface without additional software | Multiple language menu-driven display | M12 connection type | Integrated fieldbus connectivity for convenient fieldbus link and networking | Code reconstruction technology (CRT) for reliable identification of damaged codes | Optimized for modules from 0.25 to 0.5 mm	Code reconstruction technology (CRT) | Optionally as modular scanner portal (MSP) system

Stationary 2D-code readers

				
		LSIS 220	**DCR 200i**	**LSIS 422i** C-mount model
Typical applications	Code reading	Data Matrix, bar code, QR-Code, PDF 417, Aztec, GS1 Databar	Data Matrix, bar code, QR-Code, Pharmacode, Aztec, GS1 Databar	Data Matrix Code, bar code, Pharmacode
	Sensor / cameras	CMOS (Global Shutter)	CMOS (Global Shutter)	CMOS (Global Shutter)
	Resolution (pixel)	844 × 640	1,280 × 960	752 × 480
	Focal point	127 mm	U optics: 50 mm N optics: 70 mm M optics: 105 mm F optics: 185 mm L optics: 285 mm	50 mm … ∞ (focal length 8 mm) 75 mm … ∞ (focal length 16 mm)
	Interfaces	**Integrated:** RS 232 USB	**Integrated:** Ethernet TCP/IP, UDP PROFINET IO/RT RS 232 RS 422	**Integrated:** Ethernet RS 232 TCP/IP , UDP
	Connectivity	**With MA 21 connection unit** multiNet **With MA 200i connection unit** PROFINET IO/RT PROFIBUS Ethernet TCP/IP, UDP, IP EtherCAT DeviceNet CANopen	**With MA 200i connection unit** PROFIBUS Ethernet TCP/IP, UDP, IP EtherCAT DeviceNet CANopen	**With MA 21 connection unit** multiNet **With MA 200i connection unit** PROFINET IO/RT PROFIBUS EtherCAT DeviceNet CANopen
	Digital inputs / outputs	1 / 1	2 / 2	8, configurable
	Number of test routines	Memory capacity for 1 parameter set in the camera	Memory capacity for 1 parameter set in the camera	Typically 10 to 60, depending on scope of test
	Configuration / Operating system	Configuration via bar code or PC with setup program	Configuration via configuration codes or via PC using standard web browser without software to be installed additionally (webConfig tool)	Configuration via PC using standard Web browser without software to be installed additionally (webConfig tool)
	Options	Optional: connection cables | Mounting devices: BTU 300M, BT 8-0	Optional: connection cables | Optical filters | Housing hoods | External illumination | Mounting devices: BTU 320M-D12, BT 320M | MA 150 modular connection unit	Reading of directly marked Data Matrix codes | Multiple code reading | Display of the code content | Evaluation of the code quality of printed codes | Reference code comparison | Image memory | Optional: connection cables, optical filters | Mounting devices: BT 56, BT 59
	Dimensions, W × H × D	47 × 40 × 32 mm	43 × 61 × 44 mm	75 × 113 × 55 mm 75 × 113 × 106 mm
	Certifications	CE c UL us	CE c UL us	CE c UL us
Properties		Camera system for omnidirectional reading of bar codes and 2D-codes | Integrated illumination and decoder | Degree of protection IP 65	Camera system for omnidirectional reading of bar codes, stacked codes and 2D-codes | Integrated illumination (type-dependent: red or IR) | High object speed of up to 7 m/s | Integrated teach functions for simple adjustments via buttons | Optional robust stainless steel housing | Optional with NPN switching inputs/outputs | Optionally with integrated heating for use to –30 °C	Camera system for omnidirectional reading of bar codes and 2D-codes | Integrated illumination (depends on type: white, IR or RGBW) and decoder | Degree of protection IP 65 / 67K | Flexible use through motor-driven focus adjustment

Stationary 2D-code readers

		DCR 50, 55
Typical applications	Code reading	All common 1D-codes such as EAN/UPC GS1 DataBar, Pharmacode and all common 2D-codes such as Data Matrix, QR code or Aztec
	Sensor / cameras	CMOS (Rolling Shutter)
	Resolution (pixel)	1280 × 960
	Focal point	85 mm
	Interfaces	**Integrated:** RS 232, USB (DCR 55)
	Digital inputs/outputs	1 / 1
	Configuration / Operating system	Configuration with the “Leuze Sensor Studio” | Alternatively, via online commands or configuration codes
	Options	MA-CR adapter circuit board for test purposes
	Dimensions, W × H × D	31.6 × 12.7 × 27.5 mm 31.5 × 20 × 40.3 mm
	Certifications	CE c UL US (only DCR 55)
Properties		Compact code reader as module or in aluminum housing | CMOS imager and integrated decoder for all commonly used 1D and 2D codes | RS 232 or USB interface, one trigger input, one switching output, degree of protection IP 54

RFID systems

		RFI 32	RFM 32, 62
Specifications	Working frequency	125 kHz	13.56 MHz
	Max. RFID reading distance	80 mm	400 mm
	Max. speed	6.0 m/s	6.0 m/s
	Interfaces	**Integrated:** RS 232	**Integrated:** RS 232
	Connectivity	**With MA 21 connection unit** multiNet **With MA 200i connection unit** PROFINET IO/RT PROFIBUS Ethernet TCP/IP, UDP EtherCAT DeviceNet EtherNet/IP CANopen	**With MA 21 connection unit** multiNet **With MA 200i connection unit** PROFINET IO/RT PROFIBUS Ethernet TCP/IP, UDP EtherCAT DeviceNet EtherNet/IP CANopen
	Function	RFID reading	RFID reading / writing
	Possible transponder types	– Disc – High temperature proof up to 200 °C	– Disc – High temperature proof up to 250 °C – Smart label
	Supply voltage	12 – 30 V DC	12 – 30 V DC
	Degree of protection	IP 65	IP 65 / IP 67
	Certifications	CE	CE
Properties		Compact RFID reading unit | High degree of protection for tough industrial application | Mounting also in between conveyor rollers	Compact RFID write/read unit | High degree of protection for tough industrial application | Mounting also in between conveyor rollers | RFM 32 is also available as device with Ex certification

Mobile code readers



		IT 1300g	IT 1470g, 1472g		IT 1280i	
Specifications	Reading method	Line imager	Area imager	With Bluetooth	Laser/area imager	With Bluetooth
	Reading distance	10–660 mm	18–400 mm		20–4,600 mm	
	Interfaces	**Integrated:** RS 232 / USB Keyboard Wedge PS 2	**Integrated:** RS 232 / USB Keyboard Wedge PS 2		**Integrated:** RS 232 / USB Keyboard Wedge PS 2	
	Connectivity	**With MA 21 connection unit** multiNet **With MA 200i connection unit** PROFINET IO/RT PROFIBUS Ethernet TCP/IP, UDP EtherCAT DeviceNet CANopen	**With MA 21 connection unit** multiNet **With MA 200i connection unit** PROFINET IO/RT PROFIBUS Ethernet TCP/IP, UDP EtherCAT DeviceNet CANopen		**With MA 21 connection unit** multiNet **With MA 200i connection unit** PROFINET IO/RT PROFIBUS Ethernet TCP/IP, UDP EtherCAT DeviceNet CANopen	
	Accessories	Cable for: RS 232, USB, Keyboard-Wedge; desktop support, wall support, power supply unit	Cable for: RS 232, USB, Keyboard-Wedge; desktop support, wall support, power supply unit		Cable for: RS 232, USB, Keyboard-Wedge; desktop support, wall support, power supply unit	
	Supply voltage	4.5–5.5 V DC	4.5–5.5 V DC		4.5–5.5 V DC	
	Area of application	Degree of protection IP 41	Degree of protection IP 41		Tough industrial use Degree of protection IP 65	
	Code types	Bar codes	Bar codes		Bar codes	
	Certifications	CE	CE		CE	
Properties		Large reading field for bar code detection | Ergonomic and robust housing | Operating temperature 0 °C … +50 °C	Large reading field for bar code detection | Ergonomic and robust housing | Operating temperature 0 °C … +45 °C		Large reading field for bar code detection | Ergonomic and very robust housing for rough applications | Operating temperature 30 °C … +50 °C	

IT 1950g, 1952g		IT 1980i, 1981i IT 1990i, 1991i		IT 1920i	HS 6608, HS 6678	
Area imager	With Bluetooth	Area imager	With Bluetooth	Area imager	Area imager	With Bluetooth
0–820 mm		0–16,000 mm		0–170 mm	0–147 mm	
Integrated: RS 232 / USB Keyboard Wedge PS 2		**Integrated:** RS 232 / USB Keyboard Wedge PS 2		**Integrated:** RS 232 / USB Keyboard Wedge PS 2	**Integrated:** RS 232 / USB	
With MA 21 connection unit multiNet **With MA 200i connection unit** PROFINET IO/RT PROFIBUS Ethernet TCP/IP, UDP EtherCAT DeviceNet CANopen		**With MA 21 connection unit** multiNet **With MA 200i connection unit** PROFINET IO/RT PROFIBUS Ethernet TCP/IP, UDP EtherCAT DeviceNet CANopen		**With MA 21 connection unit** multiNet **With MA 200i connection unit** PROFINET IO/RT PROFIBUS Ethernet TCP/IP, UDP EtherCAT DeviceNet CANopen	**With MA 21 connection unit** multiNet **With MA 200i connection unit** PROFINET IO/RT PROFIBUS Ethernet TCP/IP, UDP EtherCAT DeviceNet CANopen	
Cable for: RS 232, USB, Keyboard-Wedge; holder, power supply unit, base station		Cable for: RS 232, USB, Keyboard-Wedge; holder, power supply unit, base station		Cable for: RS 232, USB; power supply unit, mounting bracket	Cable for: RS 232, USB, Keyboard-Wedge; holder, power supply unit, base station	
4.5–5.5 V DC		4.5–5.5 V DC		4.5–5.5 V DC	4.5–5.5 V DC	
High-contrast codes Degree of protection IP 41		Tough industrial use High-contrast codes Degree of protection IP 65 (IP 67)		Reading of directly marked codes (laser or matrix printed) with low contrast Degree of protection IP 65	Tough industrial use Reading of directly marked codes (laser or matrix printed) with low contrast Degree of protection IP 65, IP 67	
Bar codes and 2D-codes		Bar codes and 2D-codes		Bar codes and directly marked 2D-codes	Bar codes and directly marked 2D-codes	
CE		CE		CE	CE	
Large reading field for detection of high-contrast codes | Ergonomic and robust housing | Operating temperature 0 °C … +50 °C		Large reading field for detection of high-contrast codes | Ergonomic and very robust housing for rough applications | Operating temperature from –30 °C … +50 °C (IT 1990i, IT 1980i), –20 °C … +50 °C (IT 1991i, IT 1981i)		High resolution for directly marked parts (laser or matrix printed) and labels | Ergonomic and robust housing | Operating temperature 30 °C … +50 °C	High resolution for directlmarked codes | Display for successful reading with LED, signal tone and vibration | Ergonomic and robust housing | Operating temperature –30 °C … +50 °C (HS 6608) –20 °C … +50 °C (HS 6678)	

Data transmission

Contact-free transmission of information by means of infrared light

Optical data transmission enables transparent, contact-free and wear-free transmission of industrial Ethernet protocols through light emissions.

This technology is used with high-bay storage devices, side-tracking skates, electroplating plants as well as gantry cranes. We offer optical data transceivers with various operating ranges and different Ethernet networks. The sensors are characterized by their easy alignment with integrated laser alignment aid, an integrated diagnosis function as well as a bar graph indicator, thereby allowing them to be quickly put into operation.

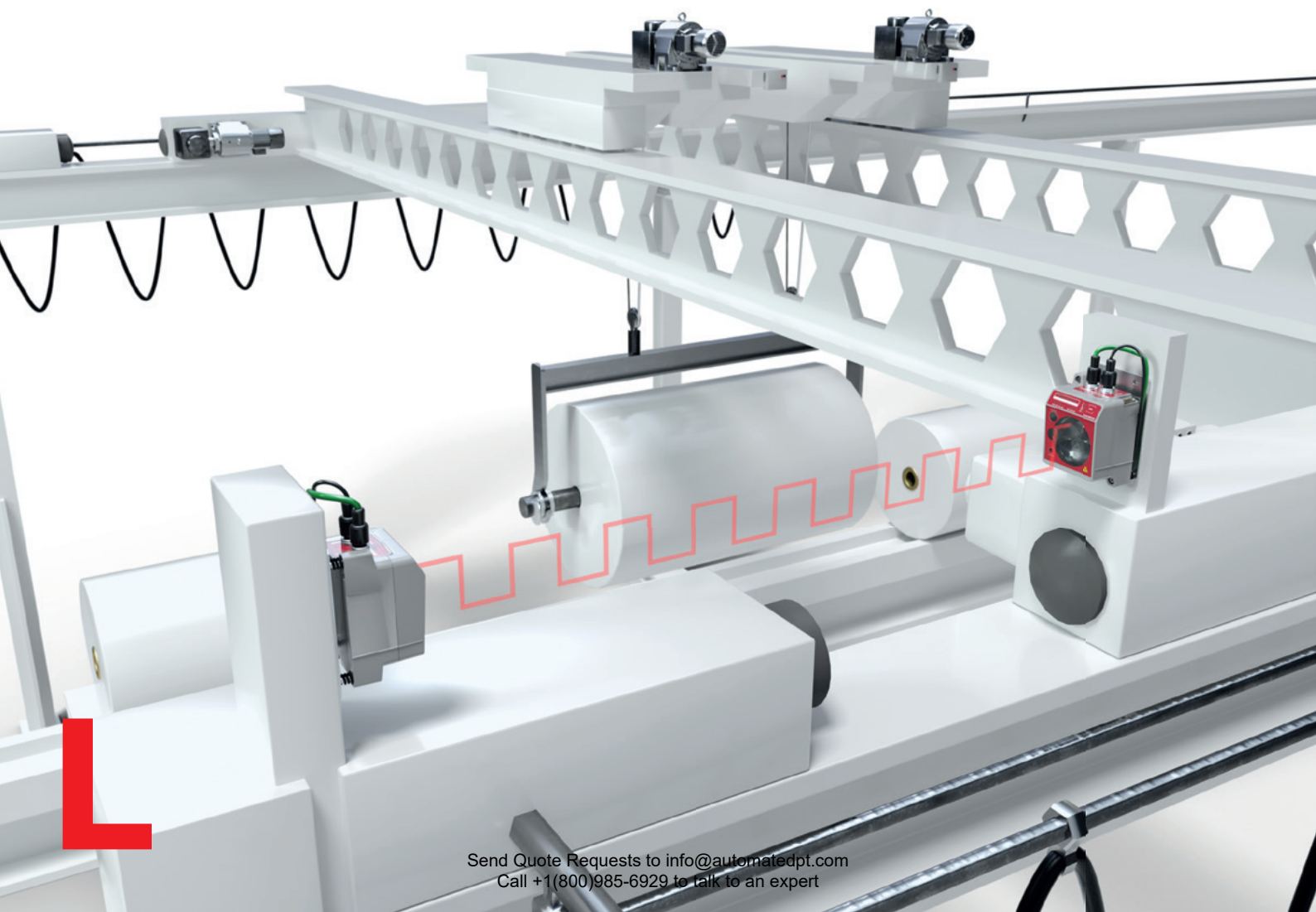

Send Quote Requests to info@automatedpt.com
Call +1(800)985-6929 to talk to an expert

Data transmission photoelectric sensor with integrated web server for remote diagnosis

With a bandwidth of 100 Mbit/s, the DDLS 500 data transmission photoelectric sensor enables contact-free communication wherever WLAN or wired transmission systems are pushed to their limits. The integrated web server, which can handle remote diagnosis, is globally unique.

The DDLS 500 also stands out as a PROFINET participant with real-time data transmission over 200 meters. Models available for various operating ranges and interface protocols. Furthermore, we offer optional equipment features, such as a laser pointer for fast mounting or optics heating.

DDLS 500

- Pre-mounted mounting and alignment plate
- Operating ranges of 40 m, 120 m and 200 m
- Optionally with heating, web server and laser alignment aid
- Can be used for all industrial Ethernet networks as well as TCP/IP communication

Optical data transmission

		DDLS 200	DDLS 500
Specifications	Operating range	120, 200, 300, 500 m	40, 120, 200 m
	Light source	Infrared LED	Infrared laser (laser class 1)
	Transmission rate	2 Mbit/s	100 Mbit/s
	Interfaces	PROFIBUS CAN DeviceNet Interbus Rockwell DH+ or RIO RS 422	PROFINET EtherNet IP EtherNet TCP/IP EtherCAT UDP
	Degree of protection	IP 65	IP 65
	Supply voltage	18 – 30 V DC	18 – 30 V DC
	Operating temperature	–5 °C … +50 °C (–30 °C … +50 °C with heating)	–5 °C … +50 °C (–35 °C … +50 °C with heating)
	Certifications	CE c UL us	CE CDRH c UL us
Properties		No-contact, wear-free data transmission | Integrated mounting and alignment plate | Optionally with heating	Transparent, real-time transmission of all TCP/IP- and UDP-based protocols | Very simple diagnosis of the transmission technology | Pre-mounted and complete delivery of all mounting and alignment elements | Integrated laser pointer for fast installation (available optionally) | Simple remote diagnosis via web browser-based user interface (available optionally) | Device models as PROFINET network participants

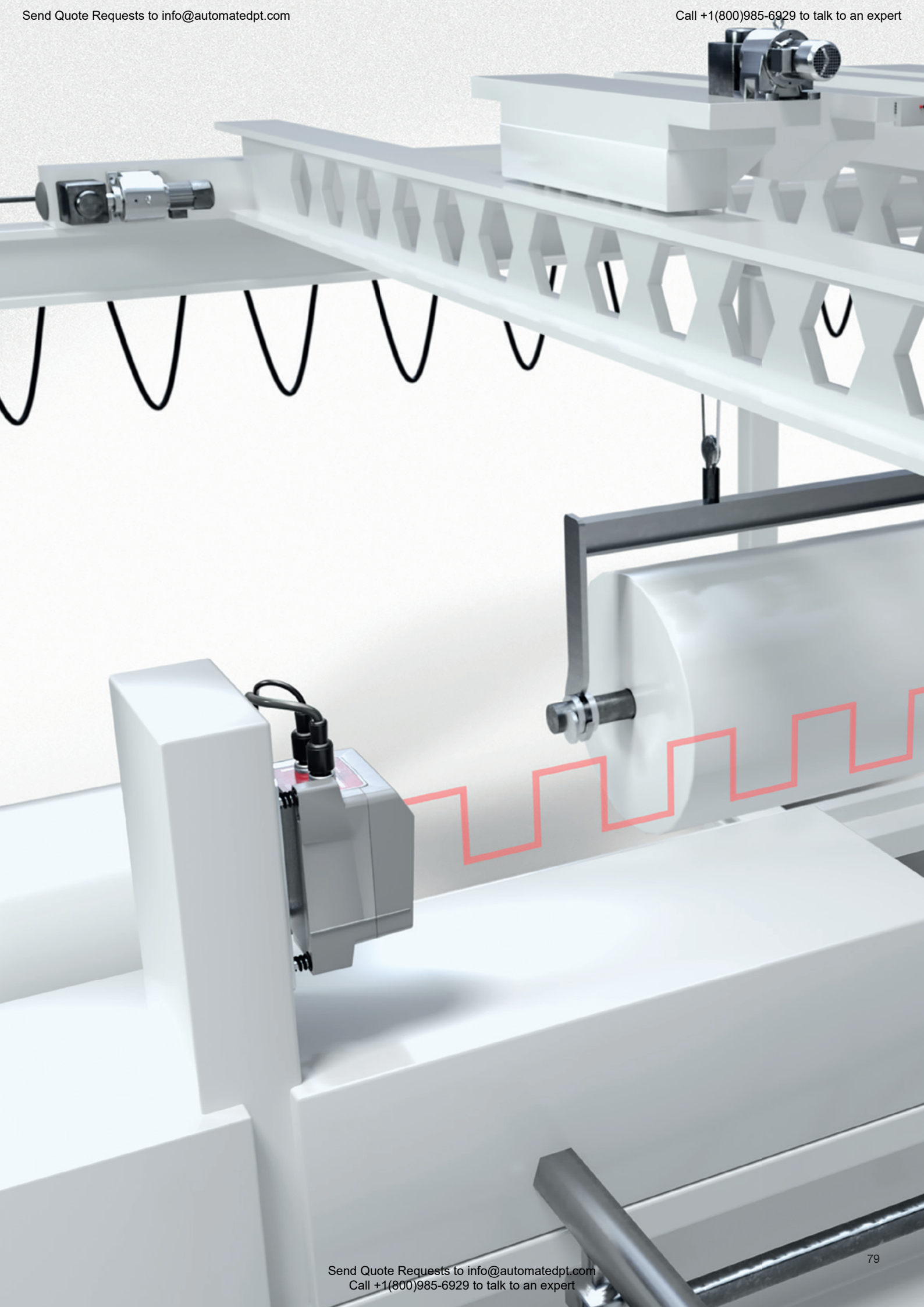

Send Quote Requests to info@automatedpt.com
Call +1(800)985-6929 to talk to an expert

Network and connection technology

Correctly connected: with our extensive range of connections for all areas of automation

Sensors are integrated in control and automation processes using connection technology. Depending on production conditions, the connection types have different advantages.

We offer you an extensive range of connections, from the cable, to the connector and connection box to the IO-Link master for applications without primary control or hybrid solutions.

The connectors and interconnection cables are available in various materials and versions for all requirements and applications in the area of automation. Our wide product range affords you maximum flexibility in the planning of your machine.

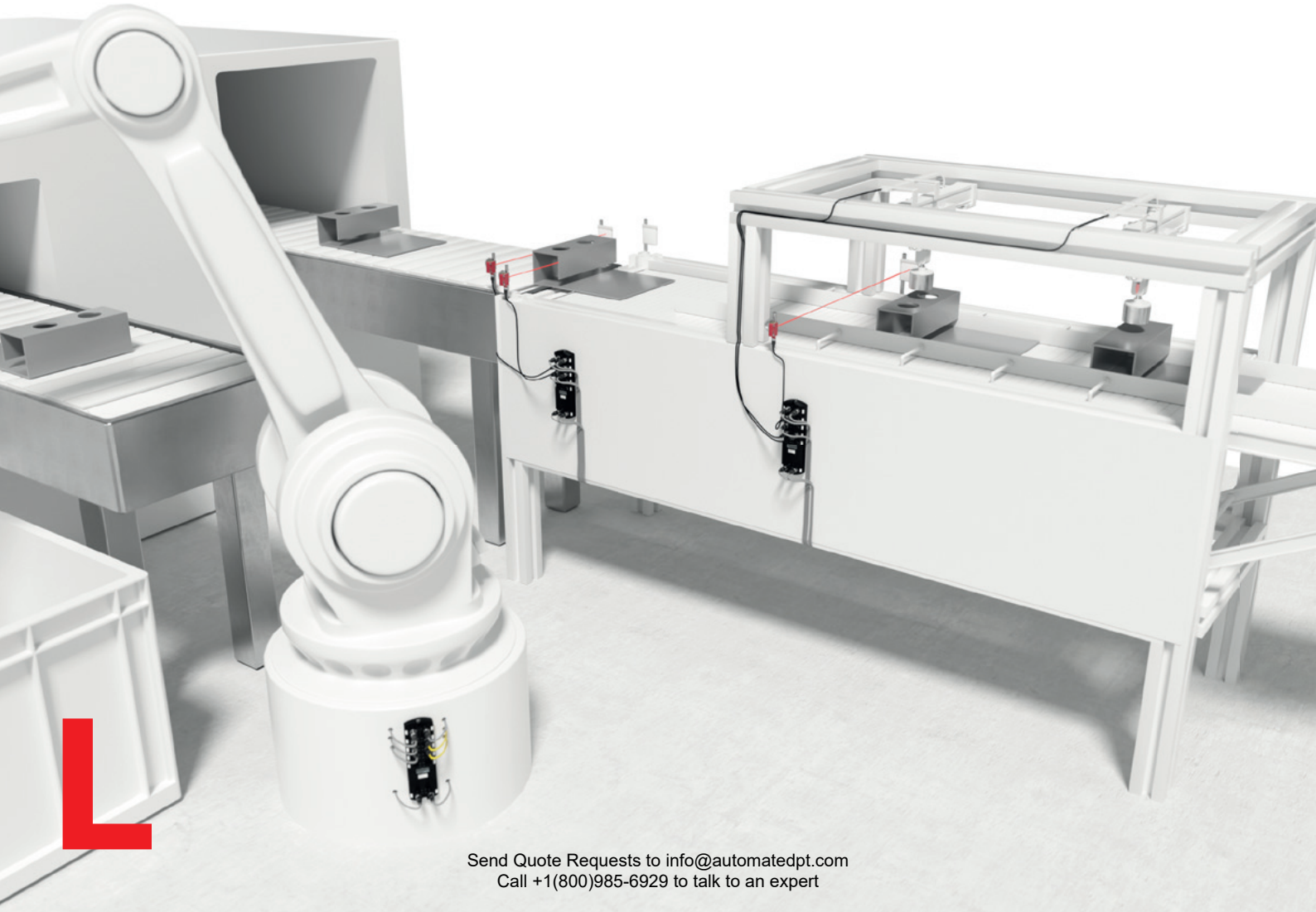

Flexible communication: from the field to the cloud. For applications without primary control or hybrid solutions

With the MD 700 and MD 200, we have IO-Link masters that offer an OPC-UA interface in addition to real-time-capable fieldbus protocols, making them ideal for cloud-based applications as well.

The completely web-based configuration concept offers an optimum stand-alone solution.

IO-Link master with OPC UA

- PROFINET/Ethernet IP interface for simple integration in industrial networks
- Switch cabinet model and field model
- Setup of hybrid systems – the time-critical application coordinates the control – aggregated condition data flows into the cloud
- Module cloning for device exchange and extension to new devices
- Stand-alone system with completely integrated web server, no further software necessary

Connection units

				
		MD 700i IO-Link master	**MD 798i** IO-Link master	**MD 742** IO-Link hub
Specifications	Connection type	2x M12, 4-pin, D-coded, Ethernet fieldbus connection 2x M12, 5-pin, L-coded, voltage supply 8x M12, 5-pin, A-coded	2x M12, 4-pin, D-coded, Ethernet fieldbus connection 2x M12, 5-pin, L-coded, voltage supply 8x M12, 5-pin, A-coded, IO-Link	1x M12, 5-pin, A-coded, IO-Link / voltage supply 8x M12, 5-pin, A-coded, 8x M8, 3-pin, digital input
	Interfaces	PROFINET EtherNet/IP IO-Link 1.1	PROFINET EtherNet/IP IO-Link 1.1	IO-Link 1.1
	Properties	Integrated switch Voltage IN/OUT 8x IO-Link Class A 8 IO-Link + 8 DI 16 DI / 8 DI/8DO	Integrated switch Voltage IN/OUT 8x IO-Link Class A+B, pin 4 in IOL mode 4x DIO + 8 SIO mode 4x DO	16 (M12) / 8 (M8) digital PNP inputs COM 2 / 38.4 kBit/s
	Shield	Shielded	Shielded	Shielded
	Degree of protection (only in the screwed-down state with the corresponding mating parts)	IP 65 / 67 / 69K*	IP 65 / 67 / 69K*	IP 65 / 67 / 69K*
	Dimensions, L × W × H	65 × 210.4 × 30 mm	60 × 230 × 39 mm	54 × 150 × 27 mm 32 × 144 × 32 mm
	Certifications	CE c UL us	CE c UL us	CE c UL us
Functions		Cloud connection via OPC UA | Integrated web server | Can be operated as stand-alone device	Integrated web server	Economical connection of digital signals
Properties		Robust design for harsh conditions | For the connection of up to 8 IO-Link devices | Parallel data exchange with control and the IT world | Models with OPC UA as standardized model for transferring data from the field level to the cloud | Stand-alone system with completely integrated web server | No further software necessary | Module cloning for device exchange and extension to new devices	Robust design for harsh conditions | Resistant to welding sparks | For the connection of up to 8 IO-Link devices | Stand-alone system with completely integrated web server | No further software necessary | Module cloning for device exchange and extension to new devices	Robust design for harsh conditions | Resistant to welding sparks | Standardized mounting holes in the middle enable flexible mounting on all standard profiles and mounting plates | For bundling up to 16 digital signals per hub | No further software necessary, description via IODD

* On consultation

		
MD 200i IO-Link master	**MD 708** Ethernet switch	**MD 7xx** Passive distribution boxes
2x RJ45 Ethernet fieldbus connections, 2x screw terminals for the voltage supply, 8 x IO-Link master ports	1x M12, 5-pin, A-coded, voltage supply 4x / 8x M12, 4-pin, D-coded	Master cable 3, 5, 10 m / 1x M12, 5-pin, A-coded / 1x M23, 12-, 19-pin
PROFINET EtherNet/IP IO-Link 1.1	Ethernet data interface	–
Integrated switch Voltage IN/OUT 8x IO-Link Class A 8 IO-Link + 8 DI 16 DI / 8 DI/8DO	Unmanaged Ethernet Switch 4 / 8x Industrial Ethernet connections	4, 6, 8 ,10 digital inputs
Shielded	Shielded	Unshielded
IP 20	IP 67	IP 65 / 67 / 69K*
114 × 45 × 108 mm	145 × 55 × 31 mm 95 × 55 × 31 mm	See data sheet
CE c UL us	CE c UL us	–
Cloud connection via OPC UA | Integrated web server | Can be operated as stand-alone device	Bundling of simple Ethernet connections	Bundling of simple digital signals
Robust design for harsh conditions | Mounting holes in the middle and additional fixing holes on the side enable flexible mounting on all standard profiles and mounting plates | For the connection of up to 8 IO-Link devices | Parallel data exchange with control and the IT world | Models with OPC UA as standardized model for transferring data from the field level to the cloud | Stand-alone system with completely integrated web server | No further software necessary | Module cloning for device exchange and extension to new devices	Robust design for harsh conditions | Mounting holes in the middle and additional fixing holes on the side enable flexible mounting on all standard profiles and mounting plates | Compatible design | Unmanaged switch | Auto negotiation | Auto crossing | Full duplex 10/100 Mbit/s	Passive distribution boxes for easy bundling of sensors | Mounting holes in the middle and additional fixing holes on the side enable flexible mounting on all standard profiles and mounting plates | Ideal for harsh industrial conditions through vibration and shock resistance | Best fit accuracy of the connectors

Connection technology



		Sensor-actuator supply cables	Connectors for individual cable lengths	Connection cables for passive distribution boxes
Specifications	Interfaces	Voltage supply, CANopen, DeviceNet, SSI, Interbus-S, Ethernet, PROFIBUS DP, PROFINET	Voltage supply, CANopen, DeviceNet, SSI, Interbus-S, Ethernet, PROFIBUS DP, PROFINET	Voltage supply, Signal transmission
	Screw fitting	Brass, nickel-plated, stainless steel	Brass, nickel-plated, stainless steel	Brass, nickel-plated, stainless steel
	No. of pins	3-, 4-, 5-, 8-, 12-, 30-pin	3-, 4-, 5-, 8-, 15-, 30-pin	8-, 12-, 19-pin
	Lengths	2, 5, 10 m (other lengths on request)	–	5, 10, 15 m (other lengths on request)
	Shield	Shielded via the knurling Guided/unshielded	Shielded via the knurling Guided/unshielded	Unshielded
	Degree of protection (only in the screwed-down state with the corresponding mating parts)	IP 65 / 67 / 69K	IP 65 / 67	IP 65 / 67 / 69K
	Mechanical life time	> 100 mating cycles	> 100 mating cycles	> 100 mating cycles
	Certifications	CE c UL us	CE c UL us	CE c UL us
Functions		Sensor-actuator voltage supply, signal transmission	Sensor-actuator voltage supply, signal transmission	Sensor-actuator voltage supply, signal transmission
Properties		Standardized product range for the connection of sensors | M8 and M12 connection cables for the connection of sensors in industrial environments | Select from 3-, 4-, 5-, 8-, 12-, 30-wire cables | Cables made of PUR, PVC, TPE and connectors with or without LED, angled or straight – high flexibility for many applications | Sensor-actuator cables satisfy the highest demands, are shock and vibration resistant, offer very bright LEDs and satisfy degrees of protection IP 65 and IP 67 (optionally IP 69K)	User-configurable connectors afford maximum flexibility when planning the machine | Individual cable lengths possible	Proper connection cable for passive distribution boxes | M12 or M23 – in 8- 12- or 19-pin version, straight or angled, cables made of PUR or PVC – high flexibility for many applications

Send Quote Requests to info@automatedpt.com
Call +1(800)985-6929 to talk to an expert

Modular connection units

		MA 8, MA 150 Point to Point	
Specifications	Connection type	1 M12 connector, 5 pin 2 sockets M12, 5 pin	1 connector, 4 M12 sockets
	Interfaces	RS 232 RS 485	RS 232 RS 422
	Properties	1 switching input 1 switching output	Decentralized distribution of the signals
	Degree of protection	IP 54	IP 54
	Certifications	CE c UL us	CE c UL us
Series	**BCL 8**	KB 008 / direct (MA 8 only)	
	BCL 92		●
	BCL 95		●
	BCL 300i		
	BCL 500i		
	BCL 900i		
	DCR 200i	direct (MA 150 only)	●
	LSIS 222		
	LSIS 4x2i		
	RFI / RFM		
	ODS 96		
	Mobile code readers		
	BPS 8	KB 008 / direct (MA 8 only)	

● The red dots denote assignment of the connection units to the relevant devices.
See catalog, for more combination possibilities.

m = multiNet




MA 100 Point-to-point multiNet slave	**MA 900** Point to Point	**MA 31** multiNet master	**MA 200i** Fieldbus gateway
Spring terminals, 5 PGs	Spring terminals, 8 PGs	Spring terminals, 5 PGs, M12 connection sets available (optional)	4x M12 1x plug connection RS 232
RS 232 RS 422 RS 485 multiNet slave	RS 232 RS 422 RS 485	RS 232 – or RS 422 –, TTY – Host multiNet master RS 485 multiNet slave Service interface RS 232 9 pin Sub-D	PROFIBUS PROFINET IO/RT Ethernet TCP/IP EtherCAT DeviceNet EtherNet/IP CANopen
1 switching input 1 switching output Network address Termination	3 switching inputs 4 switching outputs Optional external parameter memory	2 switching inputs 2 switching outputs Network address Automatic parameter memory	Integrated switch Voltage IN/OUT 1 switching input 1 switching output
IP 54	IP 65	IP 65	IP 65
CE c UL us	CE c UL us	CE	CE c UL us
			KB JST-M12A-5P-3000 connection set ●
			●
KB 301-3000 (only MA 100) m			KB 301-3000-MA200
KB-500-3000-Y (only MA 100) m			KB 500-3000-Y ●
	KB 900 ●		●
KB M12A-8P-MA-3000 ●			KB M12-8P-MA-3000 ●
KB JST ●			KB JST-M12A-8P-Y-3000 ●
direct ●			direct ●
			KB-JST-3000 ●
			KB-JST-HS-300 ●
			KB JST-M12-5P-3000 ●

Industrial image processing

Picture-perfect connection: innovative smart-camera technology paired with our code-reading competence

The product family includes devices for bar code and 2D-code reading as well as powerful tools for volume monitoring via edge scanning or for completeness and presence control through BLOB analysis.

In material processing, it is often necessary to monitor areas and processes that the system operator cannot access. Also under harsh ambient conditions.
Our LCAM 408i industrial IP camera provides this insight – even in real-time.
It allows individual process steps to be checked during the production of products.

The LSIS 400i smart camera is used above all for object detection, position determination or quality assurance in manufacturing processes.

High-performance camera technology: fast identification and economical quality assurance

The LSIS 462i smart camera is used anywhere different labels must be detected and evaluated at high speed. It reads printed and directly marked 1D- or 2D-codes absolutely reliably – independent of contrast.

In addition to BLOB analysis and code reading, it is now also possible to measure distances and geometric shapes such as circles, lines and edges, with a user interface.

Due to the broad function range, the LSIS 462i is, in many, ways the best and most efficient solution for quality inspection, code reading and measurement tasks.

LSIS 462*i*

- 3 functions in one device (BLOB analysis, code reading, measurement through edge scanning)
- Fast integration via standard web browser
- Integrated display and well-structured software simplify operation
- All parameters are stored in the device and enable high availability
- Pulsed or continuous operation depending on the application

Smart cameras

				
		LSIS 412i Smart camera	**LSIS 462i** Smart camera	**LCAM 408i** Industrial IP camera
Typical applications	Presence control / completeness monitoring	X	X	
	Dimension / position monitoring	X	X	
	Position and type detection	X	X	
	Code reading		Data Matrix, bar code, Pharmacode	
	Measurement		X	
	Monitoring camera			X
	Sensor / cameras	CMOS (Global Shutter)	CMOS (Global Shutter)	Color CMOS
	Resolution (pixel)	752 × 480	752 × 480	2,592 × 1,944
	Focal point	50 mm … ∞ (focal length 8 mm) 75 mm … ∞ (focal length 16 mm) Depends on lens with C-mount models	50 mm … ∞ (focal length 8 mm) 75 mm … ∞ (focal length 16 mm) Depends on lens with C-mount models	500 mm … ∞
	Interface	**Integrated:** Ethernet, RS 232	**Integrated:** Ethernet, RS 232	**Integrated:** Ethernet
	Connectivity	**With MA 200i connection unit** PROFINET IO/RT PROFIBUS EtherCAT DeviceNet CANopen	**With MA 200i connection unit** PROFINET IO/RT PROFIBUS EtherCAT DeviceNet CANopen	
	Digital inputs/outputs	8, configurable	8, configurable	n. a.
	Fast EtherNet	Yes	Yes	Gigabit
	Optional	Cables, mounting devices, external illumination	Cables, mounting devices, external illumination	Cables, mounting devices, air blower
	Number of test routines	Typically 10 to 60, depending on scope of test	Typically 10 to 60, depending on scope of test	n. a.
	Configuration / Operating system	Configuration via PC using standard Web browser (webConfig tool)	Configuration via PC using standard Web browser (webConfig tool)	Configuration via PC using standard Web browser (webConfig tool)
	Options		Such as LSIS 422i (s. p. 72)	
	Dimensions, W × H × D	75 × 113 × 55 mm	75 × 113 × 55 mm	75 × 113 × 55 mm / 76.5 × 66 × 126 mm
	Certifications	CE c UL us	CE c UL us	CE
Properties		Very well suited for industrial use through glass or plastic window | Metal housing and homogeneous integrated illumination (depends on type: white, IR or RGBW) | Degree of protection IP 65 / IP 67 | Flexible use through motor-driven focus adjustment	Very well suited for industrial use through glass or plastic window | Metal housing and homogeneous integrated illumination (depends on type: white, IR or RGBW) | Degree of protection IP 65 / IP 67 | Flexible use through motor-driven focus adjustment	Very well suited for industrial use through glass window and metal housing | Degree of protection IP 65 / IP 67 | 5 megapixel color camera chip for live transmission in MJPEG format

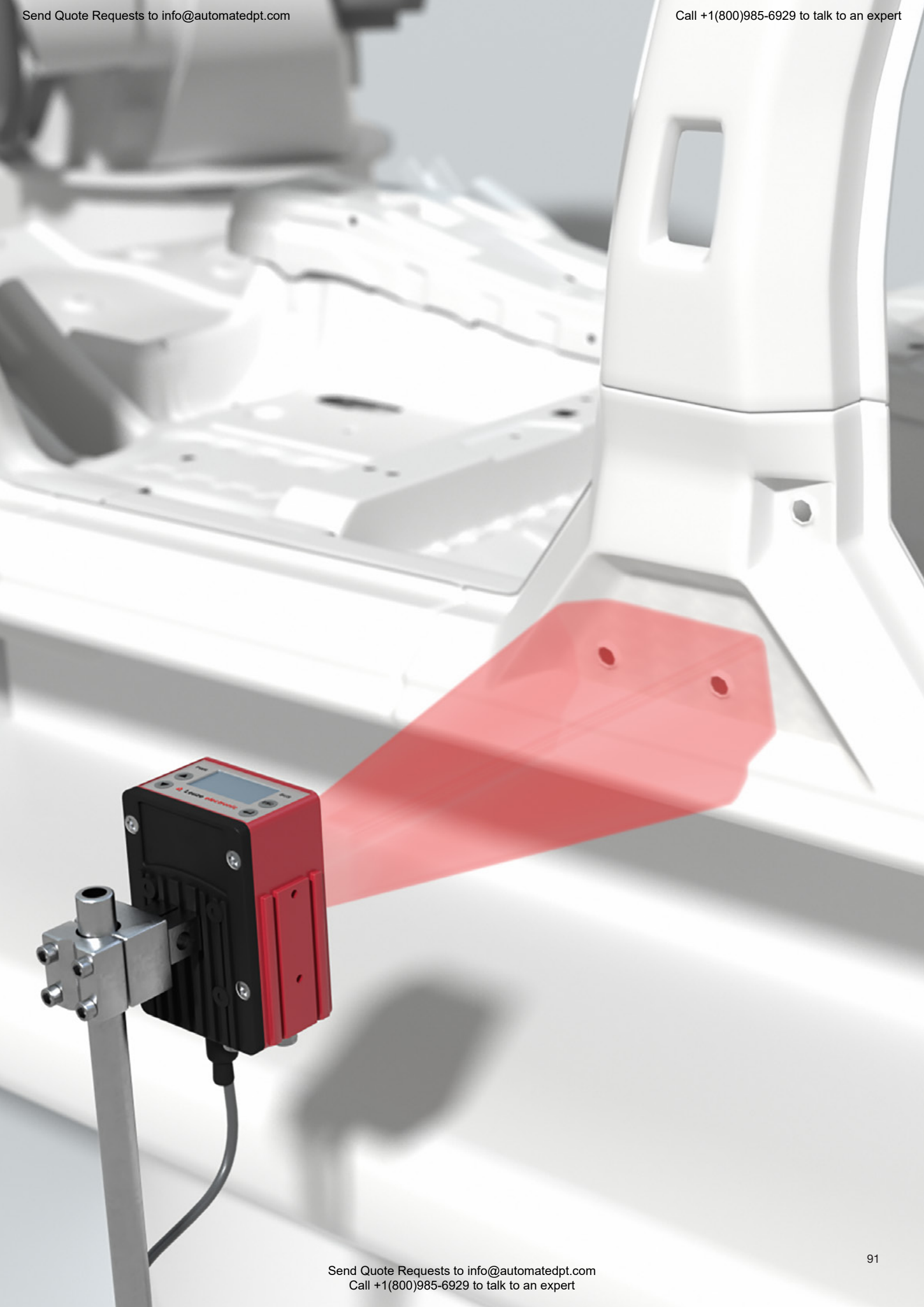

Send Quote Requests to info@automatedpt.com
Call +1(800)985-6929 to talk to an expert

Accessories and supplementary products

Smooth running: Full performance with the right accessories and perfectly matched components

Efficient work requires more than just a sensor. Almost as important are the appropriate accessories, which allow the sensor to utilize its full functionality. No matter if you need easy mounting, uncomplicated connection or reliable signaling, you can easily find the right accessories for your application in our extensive product range.

You can find our complete accessories range on our website at www.leuze.com/en/accessories.

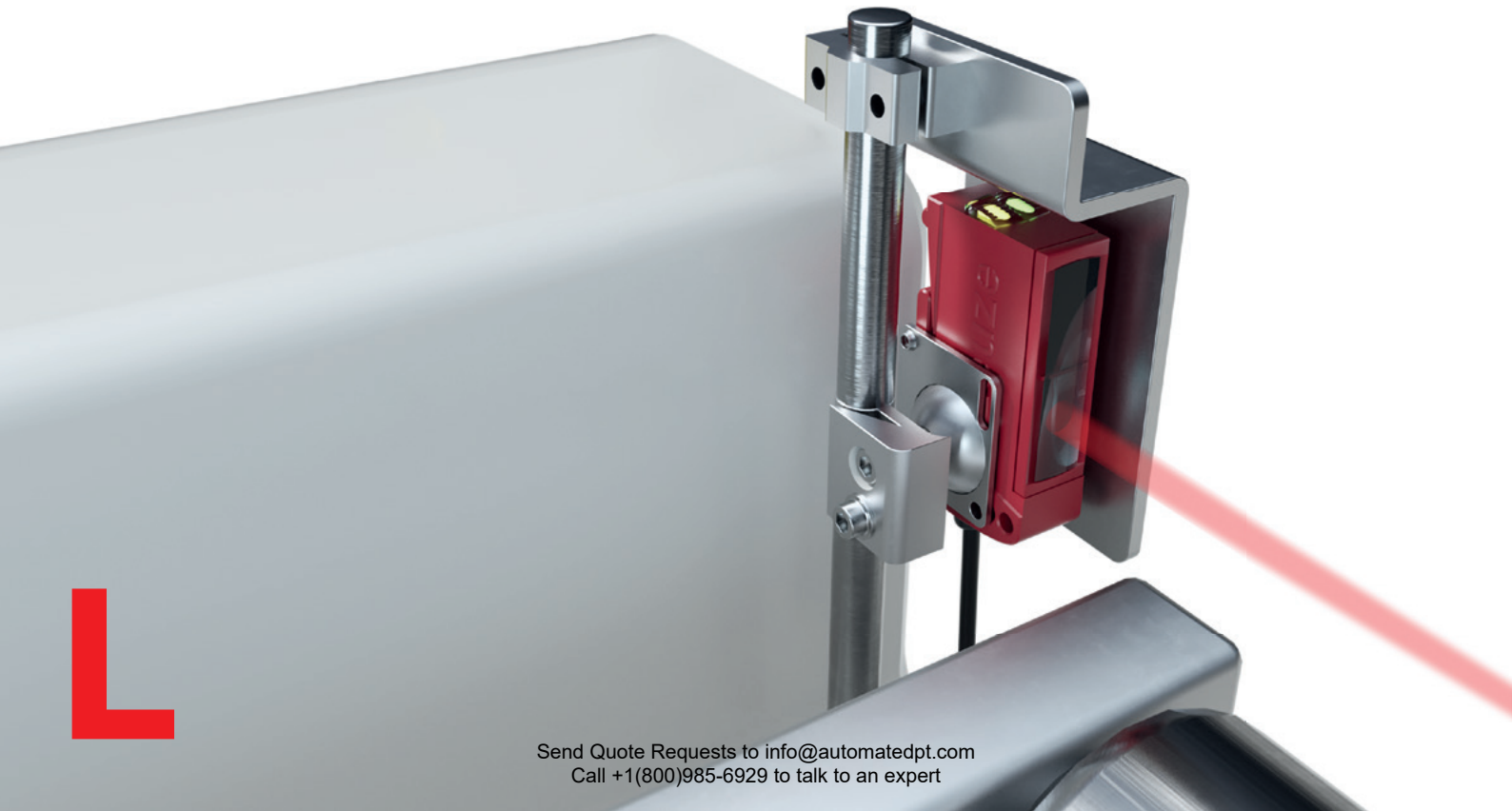

L

Cables

To facilitate the integration of our sensors, we offer a large variety of connection and interconnection cables with M8, M12, and M23 connectors – straight or angled, and with or without LED.

Mounting systems

We place great emphasis on our products being easy to mount and simple to align. For this reason, you will find specially-attuned mounting systems in our product range such as mounting brackets, rod holders or device columns.

Connection units

Today, sensors, safety switches and cameras are linked together via active or passive sensor distribution boxes with fieldbus interfaces from our product range to ensure more flexibility and transparency during installation.

Reflectors

Just how reliably retro-reflective photoelectric sensors can detect depends upon the selected reflector, among other things. That is why we offer various fitting solutions made of plastic, film, and glass for all conceivable conditions.

Power supply

A reliable and machine-independent power supply with 1- and 3-phase power supplies is an elementary part of an optimum and efficient sensor system. For this reason, we also offer load circuit monitoring modules to ensure a higher level of safeguarding against failure.

Signaling devices

For signaling in automated systems, we offer an extensive product range of single- and multi-colored transducers in order to ensure productivity and efficiency.

Signaling devices

		Signaling column, type A	Signaling column, type E
Specifications	Operating voltage	24 V DC ±10 %	24 V AC/DC, ±10%
	Degree of protection	IP 66	IP 66
	Diameter	70 mm	70 mm, 40 mm
	Certifications	CE c CSA US	CE c UL US
	Housing	Plastic, PC-ABS	Plastic, PC
Functions		Optical & acoustic signaling for displaying machine states	Optical & acoustic signaling for displaying machine states
Properties		Flexible configuration: 6 different colors (red, orange, yellow, green, blue, white) | Simple mounting: base mounting: 3 stand heights with plastic foot, flat mounting variant, hinged mounting variant | Models with and without M12 connector | Module connection via bayonet lock | Position-independent – protection against interchanging | Transparent calottes/uniform clear glass optics | Single-sound & multi-sound buzzer modules (up to 105 dB) | Preassembled models & freely configurable elements | Signal image: continuous light & flashing light | Multicolor with 7 different colors	6 different colors (red, orange, green, blue, white, yellow) | Base mounting, bracket mounting, horizontal mounting | Single-sound buzzer module | Freely configurable elements | Signal image: continuous light & flashing light

Mounting systems

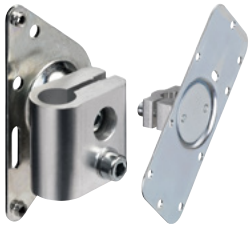

		Mounting bracket	Rod mounting	Other mounting systems
Specifications	Material	Galvanized steel, stainless steel	Galvanized steel, stainless steel, aluminum	Galvanized steel, stainless steel, aluminum, plastic
	Mounting at device	Screw type	Screw type	Screw type or clampable
	Mounting at system	Screw type	Clampable on rod	Screw type
Functions		Mounting bracket with possibility for device alignment	Mounting bracket with flexible alignment and alignment function for the device	Fixed mounting, with limit stop in some cases
Properties		Diverse versions for various sensors	Diverse versions for various sensors and reflectors	Diverse versions for various sensors with cylindrical design

Reflectors

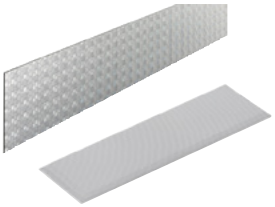

		Standard reflectors, micro-triad-type reflectors	Reflective tapes	Reflectors
Specifications	Material	PMMA	PMMA	Stainless steel and scratch-resistant plastics
	Triple reflector size	0.3 – 4 mm	0.3 – 4 mm	0.3 – 4 mm
Functions		Various sizes, from 20 to 180 mm	Various films from 9 to 920 mm, also available as rolls of 45.7 m	Different designs available
Properties		Adhesive, pluggable and screw-type versions	Adhesive and self-adhesive versions	Adhesive, clampable and screw-type versions | Versions with increased resistance for intensive use of cleaning agents

Our product range at a glance

Switching sensors
- Optical Sensors
- Inductive Switches
- Capacitive Sensors
- Ultrasonic Sensors
- Fiber Optic Sensors
- Fork Sensors
- Light Curtains
- Special Sensors

Measuring sensors
- Distance Sensors
- Sensors for Positioning
- 3D Sensors
- Light Curtains
- Bar Code Positioning Systems
- Fork Sensors

Safety
- Safety Solutions
- Safety Laser Scanners
- Safety Light Curtains
- Single and Multiple Light Beam Safety Devices
- Safety Radar Sensors
- Safe Locking Devices, Switches and Proximity Sensors
- Safety PLCs and Relays
- Machine Safety Services

Identification
- Bar Code Identification
- 2D-Code Identification
- RF Identification

Data Transmission
- Optical Data Transmission Systems

Network and connection technology
- Connection Technology
- Modular Connection Units

Industrial image processing
- Light Section Sensors
- Smart Camera

Accessories and Supplementary Products
- Signaling Devices
- Mounting Systems
- Reflectors

Your contact with us

Leuze electronic GmbH + Co. KG
In der Braike 1, 73277 Owen
Phone +49 7021 573-0
Fax +49 7021 573-199
info@leuze.com
www.leuze.com

en 01-2021/05 1231
Subject to modifications and errors