Send Quote Requests to info@automatedpt.com
Call +1(800)985-6929 to talk to an expert

HUBLOC® KEYLESS BUSHING SYSTEM

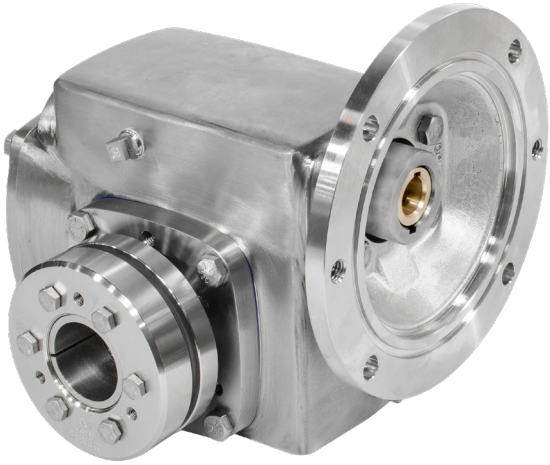

Send Quote Requests to info@automatedpt.com
Call +1(800)985-6929 to talk to an expert

VERSATILE, ROBUST, EASILY INSTALLED, AVAILABLE IN BOTH CARBON STEEL & STAINLESS STEEL

HUBLOC® KEYLESS BUSHING SYSTEM

FEATURING

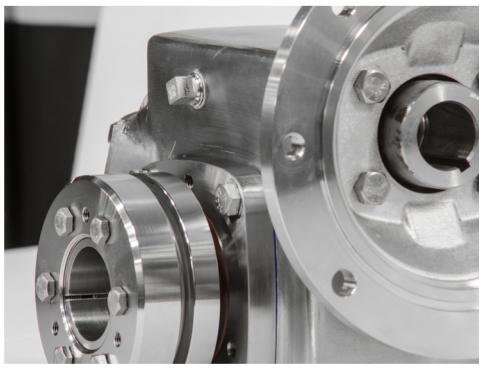

- The HubLoc system creates a keyless, backlash-free mechanical interference fit that eliminates the micromovement that causes fretting and cold welding.
- Self-centering design achieves optimum concentricity and eliminates oscillation in shaft mounted applications.
- Minimizes customer inventory, as one gearbox can be used for multiple shaft diameters.
- Ambidextrous design allows the shaft to be mounted on either side of the gearbox.
- HubLoc system can be installed easily in a few minutes requiring only standard hand tools.
- Is easily uninstalled using threaded push-off holes.
- Double tapered design allows a wide range of tolerances found on standard shafting.
- Available in both carbon steel and stainless steel.
- Available in a wide range of standard bores.
- Available as an option on HERA® Gear Drive, in both Cast Iron and Stainless Steel.
- Bolt-on split covers are made of stamped 304/304L stainless steel, .050 thickness and feature a removeable knock-out for output shaft protrusion.
- The covers are split so they can be installed after brushing onstallation.

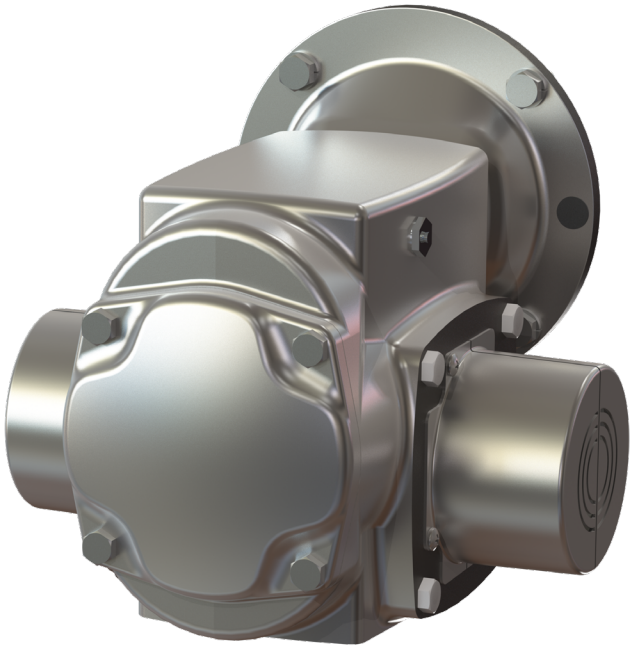

ORDERING INFORMATION

Step 2: Choose HubLoc Kit based on HubLoc Model determined in Step 1, and bore size desired.

CAST IRON PRODUCTS

PRODUCT LINE	SERIES/ MODEL	HUBLOC MODEL
HERA® Gear Drive	HERA35 HERA45 HERA55 HERA75	HL10CS HL10CS HL40CS HL40CS
Stainless Steel HERA Gear Drive	SSHERA35 SSHERA45	HL10SS HL10SS

Step 2: Choose HubLoc Kit based on HubLoc Model determined in Step 1, and bore size desired.

	HUBLOC MODEL	BORES	HUBLOC KIT MODEL
CARBON STEEL HUBLOC KITS	HL10CS	1.000 1.188 1.250 1.375 1.438	HL10CS100K* HL10CS103K* HL10CS104K* HL10CS106K* HL10CS107K*
	HL40CS	1.250 1.438 1.500 1.938 2.000	HL40CS104K HL40CS107K* HL40CS108K HL40CS115K* HL40CS200K*
STAINLESS STEEL HUBLOC® KITS	HL10SS	1.000 1.188 1.250 1.375 1.438	HL10SS100K* HL10SS103K* HL10SS104K* HL10SS106K* HL10SS107K*
	HL40SS	1.250 1.438 1.938 2.000	HL40SS104K* HL40SS107K* HL40SS115K* HL40SS200K*

HubLoc Kit contains (2) Bushings Sets and (4) Closed Split Covers.

Note: Closed cover kits that include two (2) split covers only can be ordered separately.

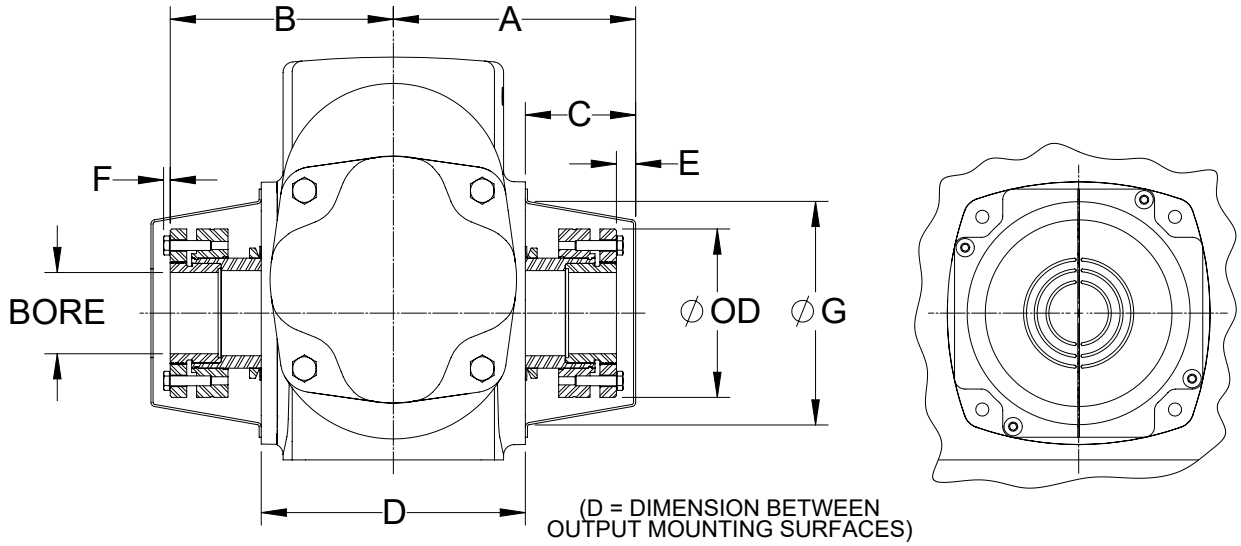

STOCK MODEL DIMENSIONS

SERIES	A	B	C	D	E	F	G	OD
HERA35EK	4.51	4.25	2.25	4.53	0.26	0.16	3.48	3.23
HERA45EK	4.89	4.50	2.25	5.28	0.40	0.16	3.48	3.23
HERA55EK	5.78	5.32	2.63	6.30	0.46	0.16	5.35	4.02
HERA75EK	6.75	6.32	2.63	8.24	0.43	0.16	5.35	4.02
SSHERA35EK	4.63	4.25	2.25	4.77	0.39	0.16	3.48	3.23
SSHERA45EK	4.89	4.50	2.25	5.28	0.40	0.16	3.48	3.23

NEW - HEAVY DUTY STAINLESS STEEL SAFETY COVERS	
HERA35 HERA45 SSHERA35 SSHERA45	0259-00375
HERA55 HERA75	0259-00376

Note: above kits include hardware and covers for one side of unit (open covers allow output shaft to protrude).

Send Quote Requests to info@automatedpt.com
Call +1(800)985-6929 to talk to an expert

Motion Control Solutions
Regal Rexnord
Customer Service: 800-626-2120
Technical Service: 800-626-2093
CustomerService.PTSolutions@regalrexnord.com

regalrexnord.com

The proper selection and application of products and components, including assuring that the product is safe for its intended use, are the responsibility of the customer. To view our Application Considerations, please visit https://www.regalrexnord.com/Application-Considerations.

To view our Standard Terms and Conditions of Sale, please visit https://www.regalrexnord.com/Terms-and-Conditions-of-Sale (which may redirect to other website locations based on product family).

"Regal Rexnord" is not indicative of legal entity. Refer to product purchase documentation for the applicable legal entity.
Regal Rexnord, Hera, Hubcap, Hub City and Hubloc are trademarks of Regal Rexnord Corporation or one of its affiliated companies.
© 2016, 2022 Regal Rexnord Corporation, All Rights Reserved. MCB22122E • Form# 10118E

Send Quote Requests to info@automatedpt.com
Call +1(800)985-6929 to talk to an expert