CALL NOW 800-985-6929 http://www.automatedpt.com Email: charles@automatedpt.com

HITACHI
Inspire the Next

X200₂ Series Inverter Instruction Manual

- Single-phase Input 200V class
- Three-phase Input 200V class
- Three-phase Input 400V class

Manual Number: NT304AX
Apr 2010

After read this manual,
Keep it handy for future reference.

Hitachi Industrial Equipment Systems Co., Ltd.

CALL NOW 800-985-6929 http://www.automatedpt.com Email: charles@automatedpt.com

Safety Messages

For the best results with the X2002 Series inverter, carefully read this manual and all of the warning labels attached to the inverter before installing and operating it, and follow the instructions exactly. Keep this manual handy for quick reference.

Definitions and Symbols

A safety instruction (message) includes a "Safety Alert Symbol" and a signal word or phrase such as WARNING or CAUTION. Each signal word has the following meaning:

HIGH VOLTAGE: This symbol indicates high voltage. It calls your attention to items or operations that could be dangerous to you and other persons operating this equipment. Read the message and follow the instructions carefully.

WARNING: indicates a potentially hazardous situation that, if not avoided, can result in serious injury or death.

CAUTION: Indicates a potentially hazardous situation that, if not avoided, can result in minor to moderate injury or serious damage to the product. The situation described in the **CAUTION** may, if not avoided, lead to serious results. Important safety measures are described in CAUTION (as well as WARNING), so be sure to observe them.

Step 1: Indicates a step in a series of action steps required to accomplish a goal. The number of the step will be contained in the step symbol.

NOTE: Notes indicates an area or subject of special merit, emphasizing either the product's capability or common errors in operation or maintenance.

TIP: Tips give a special instruction that can save time or provide other benefits while installing or using the product. The tip calls attention to an idea that may not be obvious to first-time users of the product.

Hazardous High Voltage

HIGH VOLTAGE: Motor control equipment and electronic controllers are connected to hazardous line voltages. When servicing drives and electronic controllers, there may be exposed components with housing or protrusions at or above line potential. Extreme care should be taken to protect against shock.
Stand on an insulating pad and make it a habit to use only one hand when checking components. Always work with another person in case an emergency occurs. Disconnect power before checking controllers or performing maintenance. Be sure equipment is properly grounded. Wear safety glasses whenever working on electronic controllers or rotating machinery.

Caution when using Safe Stop Function

When using Safe Stop function, make sure to check whether the safe stop function properly works when installation (before starting operation). Please carefully refer to page 4-32 to 4-35.

General Precautions – Read These First!

WARNING: This equipment should be installed, adjusted, and serviced by qualified electrical maintenance personnel familiar with the construction and operation of the equipment and the hazards involved. Failure to observe this precaution could result in bodily injury.

WARNING: The user is responsible for ensuring that all driven machinery, drive train mechanism not supplied by Hitachi Industrial Equipment Systems Co., Ltd., and process line material are capable of safe operation at an applied frequency of 150% of the maximum selected frequency range to the AC motor. Failure to do so can result in destruction of equipment and injury to personnel should a single-point failure occur.

WARNING: For equipment protection, install a ground leakage type breaker with a fast response circuit capable of handling large currents. The ground fault protection circuit is not designed to protect against personal injury.

WARNING: HAZARDOUS OF ELECTRICAL SHOCK. DISCONNECT INCOMING POWER BEFORE WORKING ON THIS CONTROL.

WARNING: Wait at least five (5) minutes after turning OFF the input power supply before performing maintenance or an inspection. Otherwise, there is the danger of electric shock.

CAUTION: These instructions should be read and clearly understood before working on X2002 series equipment.

CAUTION: Proper grounds, disconnecting devices and other safety devices and their location are the responsibility of the user and are not provided by Hitachi Industrial Equipment Systems Co., Ltd.

CAUTION: Be sure to connect a motor thermal disconnect switch or overload device to the X2002 series controller to assure that the inverter will shut down in the event of an overload or an overheated motor.

HIGH VOLTAGE: Dangerous voltage exists until power light is OFF. Wait at least five (5) minutes after input power is disconnected before performing maintenance.

WARNING: This equipment has high leakage current and must be permanently (fixed) hard-wire to earth ground via two independent cables.

WARNING: Rotating shafts and above-ground electrical potentials can be hazardous. Therefore, it is strongly recommended that all electrical work conform to the National Electrical Codes and local regulations. Installation, alignment and maintenance should be performed only by qualified personnel.

CAUTION:

a) Class I motor must be connected to earth ground via low resistive path (<0.1Ω)
b) Any motor used must be of a suitable rating.
c) Motors may have hazardous moving path. In this event suitable protection must be provided.

CAUTION: Alarm connection may contain hazardous live voltage even when inverter is disconnected. When removing the front cover for maintenance or inspection, confirm that incoming power for alarm connection is completely disconnected.

CAUTION: Hazardous (main) terminals for any interconnection (motor, contact breaker, filter, etc.) must be inaccessible in the final installation.

CAUTION: This equipment should be installed in IP54 or equivalent (see EN60529) enclosure. The end application must be in accordance with BS EN60204-1. Refer to the section "Choosing a Mounting Location" on page 2-9. The diagram dimensions are to be suitably amended for your application.

CAUTION: Connection to field wiring terminals must be reliably fixed having two independent means of mechanical support. Use a termination with cable support (figure below), or strain relief, cable clamp, etc.

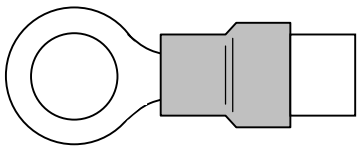

CAUTION: A double-pole disconnection device must be fitted to the incoming main power supply close to the inverter. Additionally, a protection device meet IEC947-1/ IEC947-3 must be fitted at this point (protection device data shown in "Determining Wire and Fuse Sizes" on page 2-17).

NOTE: The above instructions, together with any other requirements highlighted in this manual, must be followed for continue LVD (European Low Voltage Directive) compliance.

CALL NOW 800-985-6929 http://www.automatedpt.com Email: charles@automatedpt.com

Index to Warnings and Cautions in This Manual

Cautions and Warnings for Orientation and Mounting Procedures

HIGH VOLTAGE: Hazard of electrical shock. Disconnect incoming power before working on this control. Wait five (5) minutes before removing the front cover. ...2-3

HIGH VOLTAGE:Hazard of electrical shock. Never touch the naked PCB (printed circuit board) portions while the unit is powered up. Even for switch portion, the inverter must be powered OFF before you change. ...2-4

WARNING: In the cases below involving a general-purpose inverter, a large peak current can flow on the power supply side, sometimes destroying the converter module: ...2-8

1. The unbalance factor of the power supply is 3% or higher.
2. The power supply capacity is at least 10 times greater than the inverter capacity (or the power supply capacity is 500kVA or more).
3. Abrupt power supply changes are expected, due to the conditions such as:
   a. Several inverters are interconnected with a short bus.
   b. A thyristor converter and an inverter are interconnected with a short bus.
   c. An installed phase advance capacitor opens and closes.

CAUTION: Be sure to install the unit on flame-resistant material such as a steel plate. Otherwise, there is the danger of fire. ...2-9

CAUTION: Be sure not to place any flammable materials near the inverter. Otherwise, there is the danger of fire. ...2-9

CAUTION: Be sure not to let the foreign matter enter vent openings in the inverter housing, such as wire clippings, spatter from welding, metal shavings, dust, etc. Otherwise, there is the danger of fire. ...2-9

CAUTION: Be sure to install the inverter in a place that can bear the weight according to the specifications in the text (Chapter 1, Specifications Tables). Otherwise, it may fall and cause injury to personnel. ...2-9

CAUTION: Be sure to install the unit on a perpendicular wall that is not subject to vibration. Otherwise, it may fall and cause injury to personnel. ...2-9

CAUTION: Be sure not to install or operate an inverter that is damaged or has missing parts. Otherwise, it may cause injury to personnel. ...2-9

CAUTION: Be sure to install the inverter in a well-ventilated room that does not have direct exposure to sunlight, a tendency for high temperature, high humidity or dew condensation, high levels of dust, corrosive gas, explosive gas, inflammable gas, grinding-fluid mist, salt damage, etc. Otherwise, there is the danger of fire. ...2-9

CAUTION: Be sure to maintain the specified clearance area around the inverter and to provide adequate ventilation. Otherwise, the inverter may overheat and cause equipment damage or fire. ...2-10

CALL NOW 800-985-6929 http://www.automatedpt.com Email: charles@automatedpt.com

Wiring – Warnings for Electrical Practice and Wire Specifications

WARNING: "USE 60/75°C Cu wire only" or equivalent. For models X200-005S, -007S, -011S, -022S, -007N, -015N, -015L, -022L, -037L, -055L, -075L. ...2-18

WARNING: "USE 75°C Cu wire only" or equivalent. For models X200-002S, -004S, -002N, -004N, -002L, -004L, -007L, -022H, -030H, -037H, -040H, -055H, -075H. ...2-18

WARNING: "USE 60°C Cu wire only" or equivalent. For models X200-004H, -007H, and –015H. ...2-18

WARNING: "Open Type Equipment." ...2-18

WARNING: "Suitable for use on a circuit capable of delivering not more than 100k rms symmetrical amperes, 240V maximum when protected by Class CC, G, J or R fuses or circuit breaker having an interrupting rating not les than 100,000 rms symmetrical amperes, 240 volts maximum". For models with suffix S, N or L. ...2-18 ...2-18

WARNING: "Suitable for use on a circuit capable of delivering not more than 100k rms symmetrical amperes, 480V maximum when protected by Class CC, G, J or R fuses or circuit breaker having an interrupting rating not les than 100,000 rms symmetrical amperes, 480 volts maximum." For models with suffix H. ...2-18

HIGH VOLTAGE: Be sure to ground the unit. Otherwise, there is a danger of electric shock and/or fire. ...2-18

HIGH VOLTAGE: Wiring work shall be carried out only by qualified personnel. Otherwise, there is a danger of electric shock and/or fire. ...2-23

HIGH VOLTAGE: Implement wiring after checking that the power supply is OFF. Otherwise, you may incur electric shock and/or fire. ...2-11 ~21

HIGH VOLTAGE: Do not connect wiring to an inverter operate an inverter that is not mounted according to the instructions given in this manual.
Otherwise, there is a danger of electric shock and/or injury to personnel.

WARNING: Make sure the input power to the inverter is OFF. If the drive has been powered, leave it OFF for five minutes before continuing.

CAUTION: Power terminal assignment is different compared to old models such as L100, L200 series, etc,. Pay attention when wiring the power cable.

Wiring – Cautions for Electrical Practice

CAUTION: Fasten the screws with the specified fastening torque in the table below. Check for any loosening of screws. Otherwise, there is the danger of fire. … 2-18

CAUTION: Be sure that the input voltage matches the inverter specifications; … 2-20

- Single phase 200V to 240V 50/60Hz (up to 2.2kW) for SFEF model
- Single/Three phase 200V to 240V 50/60Hz (up to 2.2kW) for NFU model
- Three phase 200V to 240V 50/60Hz (7.5kW) for LFU model
- Three phase 380V to 480V 50/60Hz (up to 7.5kW) for HFx model

CAUTION: Be sure not to power a three-phase-only inverter with single phase power. Otherwise, there is the possibility of damage to the inverter and the danger of fire. … 2-20

CAUTION: Be sure not to connect an AC power supply to the output terminals. Otherwise, there is the possibility of damage to the inverter and the danger of injury and/or fire. … 2-20

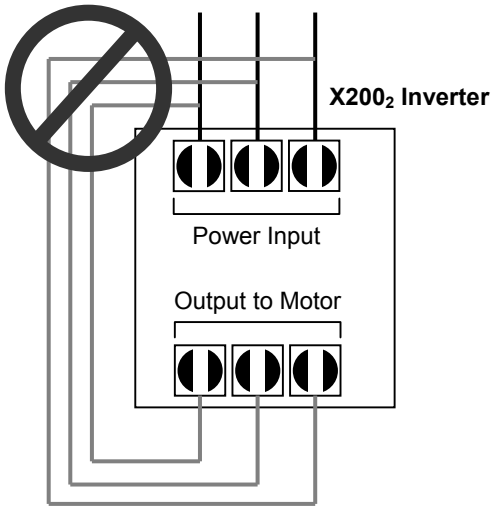

CAUTION: Remarks for using ground fault interrupter breakers in the main power supply: Adjustable frequency inverter with integrated CE-filters and shielded (screened) motor cables have a higher leakage current toward earth GND. Especially at the moment of switching ON this can cause an inadvertent trip of ground fault interrupters. Because of the rectifier on the input side of the inverter there is the possibility to stall the switch-off function through small amounts of DC current. ... 2-20

Please observe the following:

- Use only short time-invariant and pulse current-sensitive ground fault interrupters with higher trigger current.
- Other components should be secured with separate ground fault interrupters.
- Ground fault interrupters in the power input wiring of an inverter are not an absolute protection against electric shock.

CAUTION: Be sure to install a fuse in each phase of the main power supply to the inverter. Otherwise, there is the danger of fire. ... 2-20

CAUTION: For motor leads, ground fault interrupter breakers and electromagnetic contactors, be sure to size these components properly (each must have the capacity for rated current and voltage). Otherwise, there is the danger of fire. ... 2-20

Powerup Test Caution Messages

CAUTION: The heat sink fins will have a high temperature. Be careful not to touch them. Otherwise, there is the danger of getting burned. ... 2-23

CAUTION: The operation of the inverter can be easily changed from low speed to high speed. Be sure to check the capability and limitations of the motor and machine before operating the inverter. Otherwise, there is the danger of injury. ... 2-23

CAUTION: If you operate a motor at a frequency higher than the inverter standard default setting (50Hz/60Hz), be sure to check the motor and machine specifications with the respective manufacturer. Only operate the motor at elevated frequencies after getting their approval. Otherwise, there is the danger of equipment damage and/or injury. ... 2-23
... 2-29

CAUTION: Check the following before and during the Powerup test. Otherwise, there is the danger of equipment damage. ... 2-23

- Is the shorting bar between the [+1] and [+] terminals installed? DO NOT power or operate the inverter if the jumper is removed.
- Is the direction of the motor rotation correct?
- Did the inverter trip during acceleration or deceleration?
- Were the rpm and frequency meter readings as expected?
- Were there any abnormal motor vibration or noise?

Warnings for Configuring Drive Parameters

WARNING: When parameter B012, level of electronic thermal setting, is set to motor FLA rating (Full Load Ampere nameplate rating), the inverter provides solid state motor overload protection at 115% of motor FLA or equivalent. If parameter B012 exceeds the motor FLA rating, the motor may overheat and damaged. Parameter B012, level of electronic thermal setting, is a variable parameter. ... 3-34

Cautions for Configuring Drive Parameters

CAUTION: Be careful to avoid specifying a braking time that is long enough to cause motor overheating. If you use DC braking, we recommend using a motor with a built-in thermistor, and wiring it to the inverter's thermistor input (see "Thermistor Thermal Protection" on page 4-24). Also refer to the motor manufacturer's specifications for duty-cycle recommendations during DC braking. ... 3-19

HIGH VOLTAGE: When set RDY function ON, there will be a voltage appear at motor output terminals U, V and W even if the motor is in stop mode. So never touch the inverter power terminal even the motor is not running. ... 3-47

CAUTION: Do not change Debug mode for safety reasons. Otherwise unexpected performances may occur. ... 3-62

Warnings for Operations and Monitoring

WARNING: Be sure to turn ON the input power supply only after closing the front case. While the inverter is energized, be sure not to open the front case. Otherwise, there is the danger of electric shock. ... 4-3

WARNING: Be sure not to operate electrical equipment with wet hands. Otherwise, there is the danger of electric shock. ... 4-3

WARNING: While the inverter is energized, be sure not to touch the inverter terminals even when the motor is stopped. Otherwise, there is the danger of electric shock. ... 4-3

WARNING: If the retry mode is selected, the motor may suddenly restart after a trip stop. Be sure to stop the inverter before approaching the machine (be sure to design the machine so that safety for personnel is secure even if it restarts.) Otherwise, it may cause injury to personnel. ... 4-3

WARNING: If the power supply is cut OFF for a short period of time, the inverter may restart operating after the power supply recovers if the Run command is active. If a restart may pose danger to personnel, so be sure to use a lock-out circuit so that it will not restart after power recovery. Otherwise, it may cause injury to personnel. ... 4-3

WARNING: The Stop Key is effective only when the stop function is enabled. Be sure to enable the Stop Key separately from the emergency stop. Otherwise, it may cause injury to personnel. ... 4-3

WARNING: During a trip event, if the alarm reset is applied and the Run command is present, the inverter will automatically restart. Be sure to apply the alarm reset only after verifying the Run command is OFF. Otherwise, it may cause injury to personnel. ... 4-3

WARNING: Be sure not to touch the inside of the energized inverter or to put any conductive object into it. Otherwise, there is a danger of electric shock and/or fire. ... 4-3

WARNING: If power is turned ON when the Run command is already active, the motor will automatically start and injury may result. Before turning ON the power, confirm that the RUN command is not present. ... 4-3

... 4-3

WARNING: When the Stop key function is disabled, pressing the Stop key does not stop the inverter, nor will it reset a trip alarm.

WARNING: Be sure to provide a separate, hard-wired emergency stop switch when the application warrants it. ... 4-3

WARNING: If the power is turned ON and the Run command is already active, the motor starts rotation and is dangerous! Before turning power ON, confirm that the Run command is not active. ... 4-11

WARNING: After the Reset command is given and the alarm reset occurs, the motor will restart suddenly if the Run command is already active. Be sure to set the alarm reset after verifying that the Run command is OFF to prevent injury to personnel. ... 4-22

Cautions for Operations and Monitoring

CAUTION: The heat sink fins will have a high temperature. Be careful not to touch them. Otherwise, there is the danger of getting burned. ... 4-2

CAUTION: The operation of the inverter can be easily changed from low speed to high speed. Be sure to check the capability and limitations of the motor and machine before operating the inverter. Otherwise, it may cause injury to personnel. ... 4-2

CAUTION: If you operate a motor at a frequency higher than the inverter standard default setting (50Hz/60Hz), be sure to check the motor and machine specifications with the respective manufacturer. Only operate the motor at elevated frequencies after getting their approval. Otherwise, there is the danger of equipment damage. ... 4-2

CAUTION: It is possible to damage the inverter or other devices if your application exceeds the maximum current or voltage characteristics of a connection point. ... 4-4

CAUTION: Be sure to turn OFF power to the inverter before changing the short circuit bar position to change SR/SK. Otherwise, damage to the inverter circuitry may occur. ... 4-8

CAUTION: Be careful not to turn PID clear ON and reset the integrator sum when the inverter is in Run mode (output to motor is ON). Otherwise, this could cause the motor to decelerate rapidly, resulting in a trip. ... 4-26

HIGH VOLTAGE: When set RDY function ON, there will be a voltage appear at motor output terminals U, V and W even if the motor is in stop mode. So never touch the inverter power terminal even the motor is not running. ... 4-31

CAUTION: The digital outputs (relay and/or open collector) available on the drive must not be considered as safety related signals. The outputs of the external safety relay must be used for integration into a safety related control/command circuit ... 4-32

HIGH VOLTAGE: Dangerous voltage exists even after the Safe Stop is activated. It does *NOT* mean that the main power has been removed. ... 4-34

CALL NOW 800-985-6929 http://www.automatedpt.com Email: charles@automatedpt.com

Warnings and Cautions for Troubleshooting and Maintenance

WARNING: Wait at least five (5) minutes after turning OFF the input power supply before performing maintenance or an inspection. Otherwise, there is the danger of electric shock. ... 6-2

WARNING: Make sure that only qualified personnel will perform maintenance, inspection, and part replacement. Before starting to work, remove any metallic objects from your person (wristwatch, bracelet, etc.). Be sure to use tools with insulated handles. Otherwise, there is a danger of electric shock and/or injury to personnel. ... 6-2

WARNING: Never remove connectors by pulling on its wire leads (wires for cooling fan and logic P.C.board). Otherwise, there is a danger of fire due to wire breakage and/or injury to personnel. ... 6-2

CAUTION: Do not connect the megger to any control terminals such as intelligent I/O, analog terminals, etc. Doing so could cause damage to the inverter. ... 6-10

CAUTION: Never test the withstand voltage (HIPOT) on the inverter. The inverter has a surge protector between the main circuit terminals above and the chassis ground. ... 6-10

CAUTION: Do not connect the megger to any control circuit terminals such as intelligent I/O, analog terminals, etc. Doing so could cause damage to the inverter. ... 6-10

CAUTION: Never test the withstand voltage (HIPOT) on the inverter. The inverter has a surge protector between the main circuit terminals above and the chassis ground. ... 6-10

HIGH VOLTAGE: Be careful not to touch wiring or connector terminals when working with the inverters and taking measurements. Be sure to place the measurement circuitry components above in an insulated housing before using them. ... 6-14

General Warnings and Cautions

WARNING: Never modify the unit. Otherwise, there is a danger of electric shock and/or injury.

CAUTION: Withstand voltage test and insulation resistance tests (HIPOT) are executed before the units are shipped, so there is no need to conduct these tests before operation.

CAUTION: Do not attach or remove wiring or connectors when power is applied. Also, do not check signals during operation.

CAUTION: Be sure to connect the grounding terminal to earth ground.

CAUTION: When inspecting the unit, be sure to wait five minutes after turning OFF the power supply before opening the cover.

CALL NOW 800-985-6929 http://www.automatedpt.com Email: charles@automatedpt.com

CAUTION: Do not stop operation by switching OFF electromagnetic contactors on the primary or secondary side of the inverter.

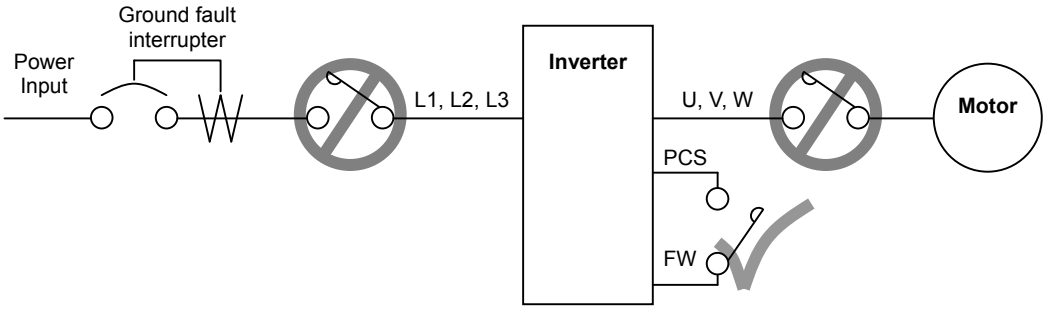

When there has been a sudden power failure while an operation instruction is active, then the unit may restart operation automatically after the power failure has ended. If there is a possibility that such an occurrence may harm humans, then install an electromagnetic contactor (Mgo) on the power supply side, so that the circuit does not allow automatic restarting after the power supply recovers. If the optional remote operator is used and the retry function has been selected, this will also cause automatic restarting when a Run command is active. So, please be careful.

CAUTION: Do not insert leading power factor capacitors or surge absorbers between the output terminals of the inverter and motor.

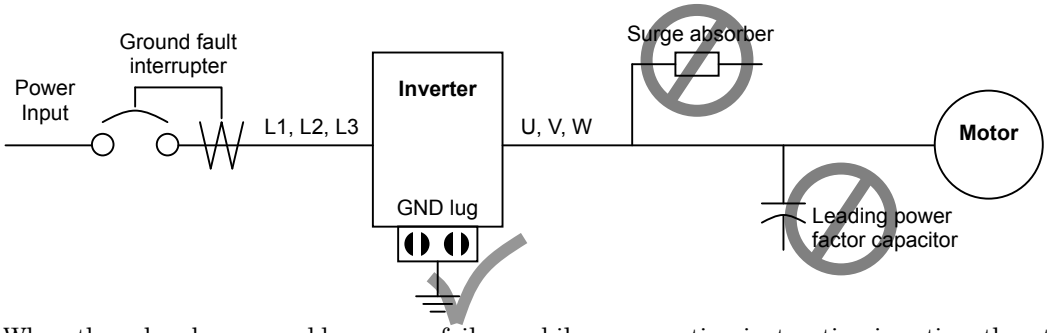

When there has been a sudden power failure while an operation instruction is active, then the unit may restart operation automatically after the power failure has ended. If there is a possibility that such an occurrence may harm humans, then install an electromagnetic contactor (Mgo) on the power supply side, so that the circuit does not allow automatic restarting after the power supply recovers. If the optional remote operator is used and the retry function has been selected, this will also cause automatic restarting when a Run command is active. So, please be careful.

CAUTION: MOTOR TERMINAL SURGE VOLTAGE SUPPRESSION FILTER (For the 400V CLASS)

In a system using an inverter with the voltage control PWM system, a voltage surge caused by the cable constants such as the cable length (especially when the distance between the motor and the inverter is 10m or more) and cabling method may occur at the motor terminals. A dedicated filter of the 400V class for suppressing this voltage surge is available. Be sure to install a filter in this situation.

CALL NOW 800-985-6929 http://www.automatedpt.com Email: charles@automatedpt.com

CAUTION: EFFECTS OF POWER DISTRIBUTION SYSTEM ON INVERTER

In the case below involving a general-purpose inverter, a large peak current can flow on the power supply side, sometimes destroying the converter module:

1. The unbalance factor of the power supply is 3% or higher.
2. the power supply capacity is at least 10 times greater than the inverter capacity (or the power supply capacity is 500kVA or more).
3. Abrupt power supply changes are expected, due to conditions such as:
   a. Several inverters are interconnected with a short bus.
   b. A thyristor converter and an inverter are interconnected with a short bus.
   c. An installed phase advance capacitor opens and closes.

Where these conditions exist or when the connected equipment must be highly reliable, you MUST install an input side AC-reactor of 3% (at a voltage drop at rated current) with respect to the supply voltage on the power supply side. Also, where the effects of an indirect lightening strike are possible, install a lightening conductor.

CAUTION: SUPPRESSION FOR NOISE INTERFERENCE FROM INVERTER

The inverter uses many semiconductor switching elements such as transistors and IGBTs. Thus, a radio receiver or measuring instrument located near the inverter is susceptible to noise interference.

To protect the instruments from erroneous operation due to noise interference, they should be used well away from the inverter. It is also effective to shield the whole inverter structure.

The addition of an EMI filter on the input side of the inverter also reduces the effect of noise from the commercial power line on external devices.

Note that the external dispersion of noise from the power line can be minimized by connecting an EMI filter on the primary side of the inverter.

- SFEF model has integrated filter complies to EN61800-3 category C1.
- HFEF model has integrated filter complies to EN61800-3 category C2.

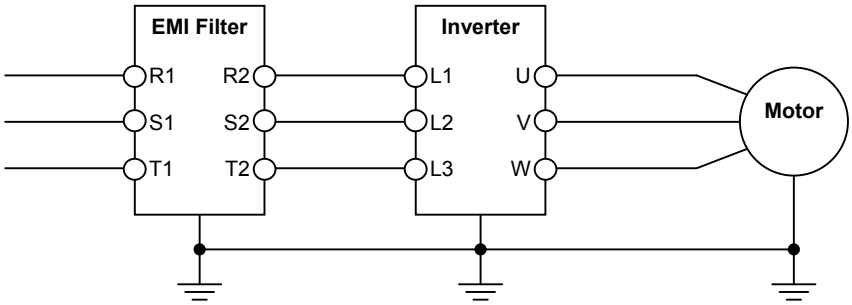

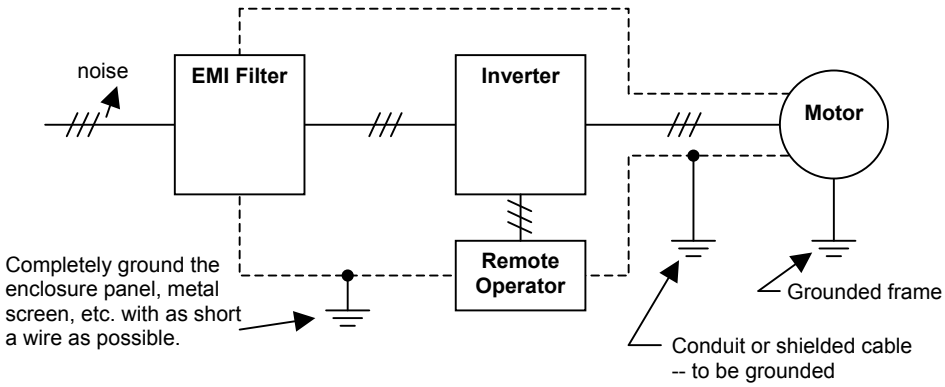

CAUTION: When the EEPROM error E08 occurs, be sure to confirm the setting values again.

CAUTION: When using *normally closed* active state settings (C011 to C015) for externally commanded Forward or Reverse terminals [FW] or [RV], the inverter may start automatically *when the external system is powered OFF or disconnected from the inverter!* So do not use normally closed active state settings for Forward or Reverse terminals [FW] or [RV] unless your system design protects against unintended motor operation.

CALL NOW 800-985-6929 http://www.automatedpt.com Email: charles@automatedpt.com

CAUTION: In all the instrumentations in this manual, covers and safety devices are occasionally removed to describe the details. While operating the product, make sure that the covers and safety devices are placed as they were specified originally and operate it according to the instruction manual.

CAUTION: Do not discard the inverter with household waste.
Contact an industrial waste management company in your area who can treat industrial waste without polling the environment.

UL® Cautions, Warnings and Instructions

Warnings and Cautions for Troubleshooting and Maintenance

The warnings and instructions in this section summarizes the procedures necessary to ensure an inverter installation complies with Underwriters Laboratories® guidelines.

WARNING: "USE 60/75°C Cu wire only" or equivalent. For models X200-005S, -007S, -011S, -015S, -022S, -007N, -015N, -015L, -022L, -037L, -055L, -075L.

WARNING: "USE 75°C Cu wire only" or equivalent. For models X200-002S, -004S, -002N, -004N, -002L, -004L, -007L, -022H, -030H, -037H, -040H, -055H, 075H.

WARNING: "USE 60°C Cu wire only" or equivalent. For models X200-004H, -007H, and –015H.

WARNING: "Open Type Equipment"

WARNING: "Suitable for use on a circuit capable of delivering not more than 100k rms symmetrical amperes, 240V maximum when protected by Class CC, G, J or R fuses or circuit breaker having an interrupting rating not les than 100,000 rms symmetrical amperes, 240 volts maximum". For models with suffix S, N or L.

WARNING: "Suitable for use on a circuit capable of delivering not more than 100k rms symmetrical amperes, 480V maximum when protected by Class CC, G, J or R fuses or circuit breaker having an interrupting rating not les than 100,000 rms symmetrical amperes, 480 volts maximum." For models with suffix H.

WARNING: "Install device inn pollution degree 2 environment."

WARNING: "Maximum Surrounding Air Temperature 50°C". or equivalent.

WARNING: "Caution-Risk of electric shock—capacitor discharge time is at least 5 minutes."

WARNING: "Solid state motor overload protection is provided in each model".

WARNING: "Integral solid state short circuit protection does not provide branch circuit protection. Branch circuit protection must be provided in accordance with the National Electric Code and any additional local codes" or equivalent.

Terminal Tightening Torque and Wire Size

The wire size range and tightening torque for field wiring terminals are presented in the tables below.

Input Voltage	Motor Output		Inverter Model	Power Terminal Wiring Size Range (AWG)	Torque	
	kW	HP			Ft-lbs	(N-m)
200V Class	0.2	1/4	X200-002SFEF2/NFU2	14 (75°C only)	0.6	0.8
	0.4	1/2	X200-004SFEF2/NFU2			
	0.55	3/4	X200-005SFEF2		0.9	1.2
	0.75	1	X200-007SFEF2/NFU2			
	1.1	1 1/2	X200-011SFEF2	12		
	1.5	2	X200-015SFEF2/NFU2			
	2.2	3	X200-022SFEF2/NFU2	10		
	3.7	5	X200-037LFU2		0.9	1.2
	5.5	7 1/2	X200-055LFU2	8	2.3	3.0
	7.5	10	X200-075LFU2			
400V Class	0.4	1/2	X200-004HFEF2/HFU2	16 (60°C only)	0.9	1.2
	0.75	1	X200-007HFEF2/HFU2			
	1.5	2	X200-015HFEF2/HFU2			
	2.2	3	X200-022HFEF2/HFU2	14 (75°C only)		
	3.0	4	X200-030HFEF2			
	4.0	5	X200-040HFEF2/HFU2			
	5.5	7 1/2	X200-055HFEF2/HFU2	10	2.3	3.0
	7.5	10	X200-075HFEF2/HFU2			

Terminal Connector	Wiring Size Range (AWG)	Torque	
		Ft-lbs	(N-m)
Logic and Analog connectors	30 – 16	0.16 – 0.19	0.22 – 0.25
Relay connector	30 – 14	0.37 – 0.44	0.5 – 0.6

Wire Connectors

WARNING: Field wiring connections must be made by a UL Listed and CSA certified ring lug terminal connector sized for the wire gauge being used. The connector must be fixed using the crimping tool specified by the connector manufacturer.

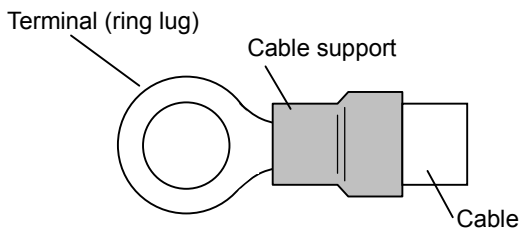

Circuit Breaker and Fuse Sizes

The inverter's connections to input power must include UL Listed inverse time circuit breakers with 600V rating, or UL Listed fuses as shown in the table below.

Input Voltage	Inverter Model	Circuit Breaker / Fuse	Ratings (A)
Single/ Three-Phase 200V	X200-002SFEF2/NFU2	Inverse time circuit Breaker	10
	X200-004SFEF2/NFU2		
	X200-005SFEF2		
	X200-007SFEF2/NFU2		15
	X200-011SFEF2		
	X200-015SFEF2/NFU2		20
	X200-022SFEF2/NFU2		30
	X200-037LFU2		
	X200-055LFU2		40
	X200-075LFU2		50
Three-Phase 400V	X200-004HFEF2/HFU2	Distribution Fuse (Class J)	3
	X200-007HFEF2/HFU2		6
	X200-015HFEF2/HFU2		10
	X200-022HFEF2/HFU2		
	X200-030HFEF2		15
	X200-040HFEF2/HFU2		
	X200-055HFEF2/HFU2		20
	X200-075HFEF2/HFU2		25

Motor Overload Protection

Hitachi X2002 inverters provide solid state motor overload protection, which depends on the proper setting of the following parameters:

- B012 "electronic overload protection"
- B212 "electronic overload protection, 2nd motor"

Set the rated current [Amperes] of the motor(s) with the above parameters. The setting range is 0.2 * rated current to 1.0 * rated current.

WARNING: When two or more motors are connected to the inverter, they cannot be protected by the electronic overload protection. Install an external thermal relay on each motor.

Table of Contents

Safety Messages

Hazardous High Voltage....i
General Precautions – Read These First! ii
Index to Warnings and Cautions in This Manual iv
General Warnings and Cautions....x
UL Cautions, Warnings and Instructions xiii
Circuit Breaker and Fuse Sizes xv

Table of Contents

Revisions xviii
Contact Information xix

Chapter 1: Getting Started

Introduction 1-2
X2002 Inverter Specifications 1-5
Introduction to Variable-Frequency Drives 1-19
Frequently Asked Questions 1-24

Chapter 2: Inverter Mounting and Installation

Orientation to Inverter Features 2-2
Basic System Description 2-7
Step-by-Step Basic Installation 2-8
Powerup Test 2-24
Using the Front Panel Keypad 2-26

Chapter 3: Configuring Drive Parameters

Choosing a Programmable Device 3-2
Using the Keypad Devices 3-3
“D” Group: Monitoring Functions 3-6
“F” Group: Main Profile Parameters 3-9
“A” Group: Standard Functions 3-10
“B” Group: Fine Tuning Functions 3-32
“C” Group: Intelligent Terminal Functions 3-49
“H” Group: Motor Constants Functions 3-65

CALL NOW 800-985-6929 http://www.automatedpt.com Email: charles@aut

Chapter 4: Operations and Monitoring

Introduction 4-2
Connecting to PLCs and Other Devices 4-4
Control Logic Signal Specifications 4-6
Intelligent Terminal Listing 4-7
Using Intelligent Input Terminals 4-8
Using Intelligent Output Terminals 4-36
Analog Input Operation 4-55
Analog Output Operation 4-57
PID Loop Operation 4-58
Configuring the Inverter for Multiple Motors 4-60

Chapter 5: Inverter System Accessories

Introduction 5-2
Component Description 5-3
Dynamic Braking 5-5

Chapter 6: Troubleshooting and Maintenance

Troubleshooting 6-2
Monitoring Trip Events, History, & Conditions 6-5
Restoring Factory Default Settings 6-8
Maintenance and Inspection 6-9
Warranty 6-16

Appendix A: Glossary and Bibliography

Glossary A-2
Bibliography A-8

Appendix B: ModBus Network Communications

Introduction B-2
Connecting the Inverter to ModBus B-3
Network Protocol Reference B-6
ModBus Data Listing B-19

Appendix C: Drive parameter Setting Tables

Introduction C-2
Parameter Settings for Keypad Entry C-2

Appendix D: CE-EMC Installation Guidelines

CE-EMC Installation Guidelines D-2
Hitachi EMC Recommendations D-5

Index

CALL NOW 800-985-6929 http://www.automatedpt.com Email: charles@automatedpt.com

CALL NOW 800-985-6929 http://www.automatedpt.com Email: charles@automatedpt.com

Revisions

Revision History Table

No.	Revision Comments	Date of Issue	Operation Manual No.
	Initial release of manual NT304X This manual is valid with QRG (NT3041X) and Caution (NTZ304X)	Dec. 2008	NT304X
1	Minor corrections throughout	Apr.2010	NT304AX

CALL NOW 800-985-6929 http://www.automatedpt.com Email: charles@automatedpt.com

CALL NOW 800-985-6929 http://www.automatedpt.com Email: charles@automatedpt.com

Contact Information

Hitachi America, Ltd.
Power and Industrial Division
50 Prospect Avenue
Tarrytown, NY 10591
U.S.A.
Phone: +1-914-631-0600
Fax: +1-914-631-3672

Hitachi Australia Ltd.
Level 3, 82 Waterloo Road
North Ryde, N.S.W. 2113
Australia
Phone: +61-2-9888-4100
Fax: +61-2-9888-4188

Hitachi Europe GmbH
Am Seestern 18
D-40547 Dusseldorf
Germany
Phone: +49-211-5283-0
Fax: +49-211-5283-649

Hitachi Industrial Equipment Systems Co., Ltd.
AKS Building, 3, kanda Neribei-cho
Chiyoda-ku, Tokyo, 101-0022
Japan
Phone: +81-3-4345-6910
Fax: +81-3-4345-6067

Hitachi Asia Ltd.
16 Collyer Quay
#20-00 hitachi Tower, Singapore 049318
Singapore
Phone: +65-538-6511
Fax: +65-538-9011

Hitachi Industrial Equipment Systems Co., Ltd.
Narashino Division
1-1, Higashi-Narashino 7-chome
Narashino-shi, Chiba 275-8611
Japan
Phone: +81-47-474-9921
Fax: +81-47-476-9517

Hitachi Asia (Hong Kong) Ltd.
7th Floor, North Tower
World Finance Centre, Harbour City
Canton Road, Tsimshatsui, Kowloon
Hong Kong
Phone: +852-2735-9218
Fax: +852-2735-6793

NOTE: To receive technical support for the Hitachi inverter you purchased, contact the Hitachi inverter dealer from whom you purchased the unit, or the sales office or factory contact listed above. Please be prepared to provide the following inverter nameplate information:

1. Model
2. Date of purchase
3. Manufacturing number (MFG No.)
4. Symptoms of any inverter problem

If any inverter nameplate information is illegible, please provide your Hitachi contact with any other legible nameplate items. To reduce unpredictable downtime, we recommend that you stock a spare inverter.

CALL NOW 800-985-6929 http://www.automatedpt.com Email: charles@automatedpt.com

CALL NOW 800-985-6929 http://www.automatedpt.com Email: charles@aut

Getting Started

1

In This Chapter… **page**

- **Introduction** **2**
- **X2002 Inverter Specifications** **5**
- **Introduction to Variable-Frequency Drives** **19**
- **Frequently Asked Questions** **24**

CALL NOW 800-985-6929 http://www.automatedpt.com Email: charles@automatedpt.com

Introduction

Main Features

Congratulation on your purchase of an X200₂ Series Hitachi inverter! This inverter drive features state-of-the-art circuitry and components to provide high performance. The housing footprint is exceptionally small, given the size of the corresponding motor. The Hitachi X200₂ product line includes more than a dozen inverter models to cover motor sizes from 1/4 horsepower to 10 horsepower, in either 240VAC or 480VAC power input versions.
The main features are:

X200-004LFU

X200-037LFU

- 200V and 400V class inverters
- US or EU versions available (country-specific input voltage range and default values)
- Built-in RS485 MODBUS RTU as standard
- New current suppressing function
- Sixteen programmable speed levels
- PID control adjusts motor speed automatically to maintain a process variable value
- Integrated CE filter for SFE and HFE versions

The design in Hitachi inverters overcomes many of the traditional trade-offs between speed, torque and efficiency. The performance characteristics are:

- High starting torque of 100% at 6Hz
- Continuous operation at 100% torque within a 1:10 speed range (6/60Hz / 5/50Hz) without motor derating.
- Fan has ON/OFF selection to provide longer life for cooling fan.

A full line of accessories from Hitachi is available to complete your motor application:

- Digital remote operator keypad
- Panel-mount keypad bezel kit and DIN rail mounting adapter (35mm rail size)
- Dynamic braking unit with resistors
- Radio noise filters

Operator Interface Options

The X200₂ inverter can utilize a remote keypads, such as the OPE-SRmini (right) or SRW-0EX (below). This allows the keypad to operate the inverter remotely, as shown (below, left). A cable (part no. ICS-1 or ICS-3, 1m or 3m) connects the modular connectors of the keypad and inverter.

OPE–SRmini

Hitachi offers a panel mount keypad kit for the OPE-SRmini (below, right). It includes the mounting flange, gasket, keypad, and other hardware. You can mount the keypad with the potentiometer for a NEMA1 rating. The kit also provides for removing the potentiometer knob to meet NEMA4X requirements, as shown (part no. 4X-KITmini).

4X–KITmini

Digital Operator Copy Unit – The optional digital operator / copy unit (part no.SRW-0EX) is shown to the right. It has a 2-line display that shows parameters by function code and by name. It has the additional capability of reading (uploading) the parameter settings in the inverter into its memory. Then you can connect the copy unit on another inverter and write (download) the parameter settings into that inverter. OEMs will find this unit particularly useful, as one can use a single copy unit to transfer parameter settings from one inverter to many.

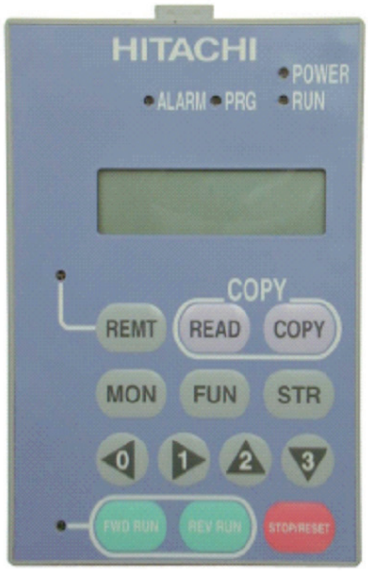

SRW–0EX

NOTE: Copy is possible between X200₂ series. It is not possible to copy between X200₂ series and other models.

Other digital operator interfaces may be available from your Hitachi distributor for particular industries or international markets. Contact your Hitachi distributor for further details.

NOTE: Never turn power OFF while copying (display "Copy CMD!!"). Otherwise the inverter may lose functionality at next power ON.

Inverter Specification Label

The Hitachi X200₂ inverters have product labels located on the right side of the housing, as pictured below. Be sure to verify that the specifications on the labels match your power source, and application safety requirements.

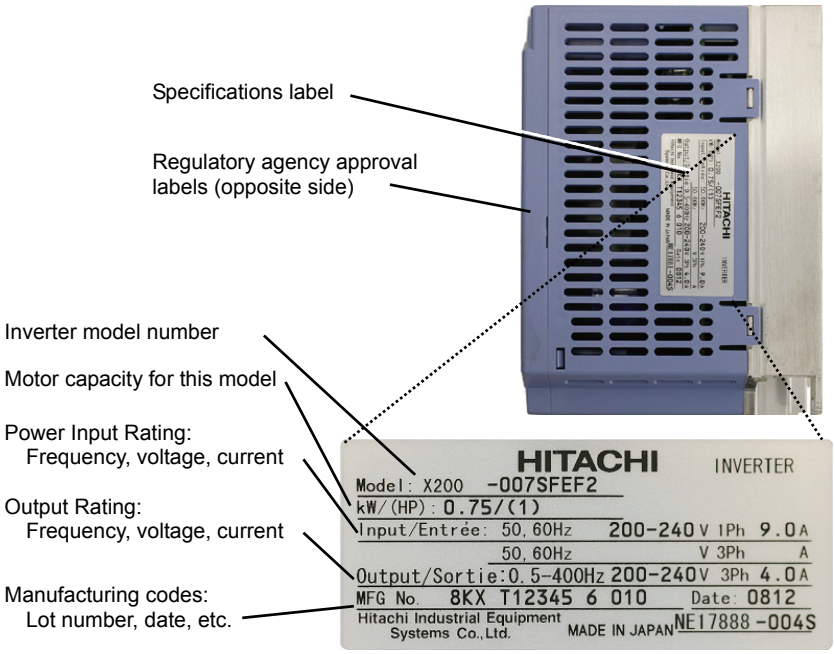

Inverter Specification Label

The model number for a specific inverter contains useful information about its operating characteristics. Refer to the model number legend below:

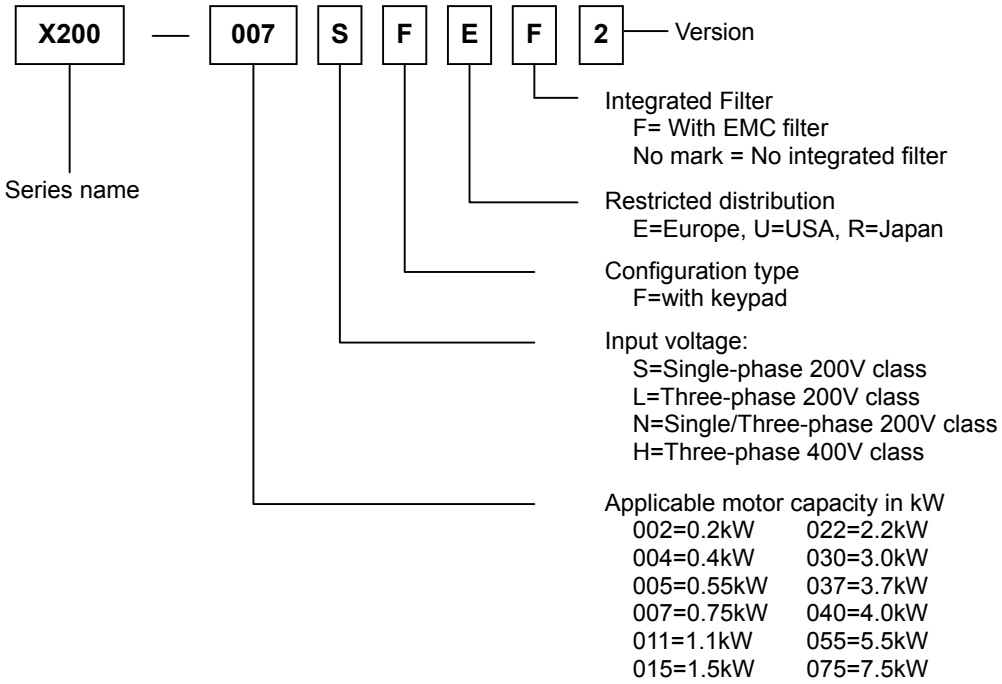

X2002 Inverter Specifications

Model-specific tables for 200V and 400V class inverters

The following tables are specific to X2002 inverters for the 200V and 400V class model groups. Note that "General Specifications" on page 1-10 apply to both voltage class groups. Footnotes for all specification tables follow the table below.

Item			200V class Specifications				
X2002 inverters, 200V models	EU version		002SFEF2	004SFEF2	005SFEF2	007SFEF2	011SFEF2
	USA version		002NFU2	004NFU2	–	007NFU2	–
Applicable motor size *2		kW	0.2	0.4	0.55	0.75	0.11
		HP	1/4	1/2	3/4	1	1.5
Rated capacity (kVA)	230V		0.5	1.0	1.1	1.5	1.9
	240V		0.5	1.0	1.2	1.6	2.0
Rated input voltage			- SFEF2 type: 1-phase input only - NFU2 type: 1-phase or 3-phase input 1-phase: 200V-15% to 240V +10%, 50/60Hz ±5% 3-phase: 200V-15% to 240V ±10%, 50/60Hz ±5%				
Integrated EMC filter	EU version		SFEF2 series : EN61800-3 category C1 filter				
	USA version		–				
Rated input current (A)	EU version		3.1	5.8	6.7	9.0	11.2
	USA version		1.8	3.4	-	5.2	-
Rated output voltage *3			3-phase: 200 to 240V (proportional to input voltage)				
Rated output current (A)			1.4	2.6	3.0	4.0	5.0
Efficiency at 100% rated output			89.0%	92.3%	93.2%	94.1%	94.7%
Watt loss (fc=3kHz) Approximate (W) *13	at 70% output		18	24	26	33	42
	at 100% output		22	31	34	44	58
Starting torque *7			100% at 6Hz				
Braking	Dynamic braking, approx. % torque (short time stop from 50/60Hz) *8		100%: ≤50Hz 50%: ≤60Hz				
			Capacitive feedback type, dynamic braking unit and braking resistor optional, individually installed				
	DC braking		Variable operating frequency, time, and braking force				
Weight	EU version (-SFEF2)	Kg	0.8	1.0	1.5	1.5	2.4
		lb	1.77	2.21	3.31	3.31	5.30
	USA version (-NFU2)	Kg	0.8	0.9	–	1.5	–
		lb	1.77	1.99	–	3.31	–

CALL NOW 800-985-6929 http://www.automatedpt.com Email: charles@automatedpt.com

Footnotes for the preceding table and the tables that follow:

Note1: The protection method conforms to JEM 1030.

Note2: The applicable motor refers to Hitachi standard 3-phase motor (4p). When using other motors, care must be taken to prevent the rated motor current (50/60Hz) from exceeding the rated output current of the inverter.

Note3: The output voltage decreases as the main supply voltage decreases (except when using the AVR function). In any case, the output voltage cannot exceed the input power supply voltage.

Note4: To operate the motor beyond 50/60Hz, consult the motor manufacturer for the maximum allowable rotation speed.

Note5: EU version inverters (-SFEF2 and –HFEF2) have integrated EMC filter.

Note6: For achieving approved input voltage rating categories:

- 460 to 480VAC – Over-voltage category 2
- 380 to 460VAC – Over-voltage category 3

To meet the Over-voltage category 3, insert an EN or IEC standard compliant isolation transformer that is earth grounded and star connected (for Low Voltage Directive).

Note7: At the rated voltage when using a Hitachi standard 3-phase, 4-pole motor.

Note8: The braking torque via capacitive feedback is the average deceleration torque at the shortest deceleration (stopping from 50/60Hz as indicated). It is not continuous regenerative braking torque. The average deceleration torque varies with motor loss. This value decreases when operating beyond 50Hz. If a large regenerative torque is required, the optional regenerative braking unit and a resistor should be used.

Note9: The frequency command is the maximum frequency at 9.8V for input voltage 0 to 10VDC, or at 19.6mA for input current 4 to 20mA. If this characteristic is not satisfactory for your application, contact your Hitachi representative.

Note10: If the inverter is operated outside the region shown in the graph in the derating curve, the inverter may be damaged or its service life may be shortened. Set B083 Carrier Frequency Adjustment in accordance with the expected output current level. See derating curve section for the detailed information of the inverter operating range.

Note11: The storage temperature refers to the short-term temperature during transportation.

Note12: Conforms to the test method specified in JIS C0040 (1999). For the model types excluded in the standard specifications, contact your Hitachi sales representative.

Note13: Watt losses are calculated values based on specification of main semi-conductors. You must take suitable margin when designing cabinet based on these values. Otherwise there is a possibility of heating trouble.

CALL NOW 800-985-6929 http://www.automatedpt.com Email: charles@automatedpt.com

X200 Inverter Specifications, continued…

Item			200V class Specifications				
X2002 inverters, 200V models	EU version		015SFEF2	022SFEF2	–	–	–
	USA version		015NFU2	022NFU2	037LFU2	055LFU2	075LFU2
Applicable motor size *2		kW	1.5	2.2	3.7	5.5	7.5
		HP	**2**	**3**	**5**	**7.5**	**10**
Rated capacity (kVA)	230V		2.8	3.9	6.3	9.5	12.7
	240V		2.9	4.1	6.6	9.9	13.3
Rated input voltage			- SFEF2 type: 1-phase input only - NFU2 type: 1-phase or 3-phase input - LFU2 type: 3-phase input only 1-phase: 200V-15% to 240V +10%, 50/60Hz ±5% 3-phase: 200V-15% to 240V ±10%, 50/60Hz ±5%				
Integrated EMC filter	EU version		SFEF2 series ：EN61800-3 category C1 filter				
	USA version		–				
Rated input current (A)	EU version		16.0	22.5	–	–	–
	USA version		9.3	13.0	20.0	30.0	40.0
Rated output voltage *3			3-phase: 200 to 240V (proportional to input voltage)				
Rated output current (A)			7.1	10.0	15.9	24	32
Efficiency at 100% rated output			94.5%	96.0%	96.4%	96.1%	96.1%
Watt loss (fc=3kHz) Approximate (W) *13	at 70% output		58	61	91	138	186
	at 100% output		83	87	133	215	295
Starting torque *7			100% at 6Hz				
Braking	Dynamic braking, approx. % torque (short time stop from 50/60Hz) *8		50%: ≤60Hz	20%: ≤60Hz			
			Capacitive feedback type, dynamic braking unit and braking resistor optional, individually installed				
	DC braking		Variable operating frequency, time, and braking force				
Weight	EU version (-SFEF2)	Kg	2.4	2.5	–	–	–
		lb	5.30	5.52	–	–	–
	USA version (-N/LFU2)	Kg	2.3	2.4	2.3	4.2	4.2
		lb	5.08	5.30	5.08	9.27	9.27

Item			400V class Specifications			
X2002 inverters, 400V models	EU version		004HFEF2	007HFEF2	015HFEF2	022HFEF2
	USA version		004HFU2	007HFU2	015HFU2	022HFU2
Applicable motor size *2		kW	0.4	0.75	1.5	2.2
		HP	1/2	1	2	3
Rated capacity (kVA)	380V		0.9	1.6	2.5	3.6
	480V		1.2	2.0	3.1	4.5
Rated input voltage *6			3-phase: 380V-15% to 480V ±10%, 50/60Hz ±5%			
Integrated EMC filter	EU version		HFEF2 series : EN61800-3 category C2 filter			
	USA version		–			
Rated input current (A)			2.0	3.3	5.0	7.0
Rated output voltage *3			3-phase: 380 to 480V (proportional to input voltage)			
Rated output current (A)			1.5	2.5	3.8	5.5
Efficiency at 100% rated output			93.8%	94.9%	96.4%	96.9%
Watt loss (fc=3kHz) Approximate (W) *13	at 70% output		20	29	40	49
	at 100% output		25	38	54	68
Starting torque *7			100% at 6Hz			
Braking	Dynamic braking, approx. % torque (short time stop from 50/60Hz) *8		50%: ≤ 60Hz			20%: ≤ 60Hz
			Capacitive feedback type, dynamic braking unit and braking resistor optional, individually installed			
	DC braking		Variable operating frequency, time, and braking force			
Weight	EU version (-HFEF2)	Kg	1.5	2.3	2.4	2.4
		lb	3.31	5.08	5.30	5.30
	USA version (-HFU2)	Kg	1.4	2.2	2.3	2.3
		lb	3.09	4.86	5.08	5.08

Item			400V class Specifications			
X2002 inverters, 400V models	EU version		030HFEF2	040HFEF2	055HFEF2	075HFEF2
	USA version		–	040HFU2	055HFU2	075HFU2
Applicable motor size *2		kW	3.0	4.0	5.5	7.5
		HP	**4**	**5**	**7.5**	**10**
Rated capacity (kVA)	380V		5.1	5.6	8.5	10.5
	480V		6.4	7.1	10.8	13.3
Rated input voltage *6			3-phase: 380V-15% to 480V ±10%, 50/60Hz ±5%			
Integrated EMC filter	EU version		HFEF2 series ：EN61800-3 category C2 filter			
	USA version		–			
Rated input current (A)			10.0	11.0	16.5	20.0
Rated output voltage *3			3-phase: 380 to 480V (proportional to input voltage)			
Rated output current (A)			7.8	8.6	13	16
Efficiency at 100% rated output			96.8%	97.3%	97.3%	97.5%
Watt loss (fc=3kHz) Approximate (W) *13	at 70% output		68	74	101	127
	at 100% output		96	107	150	189
Starting torque *7			100% at 6Hz			
Braking	Dynamic braking, approx. % torque (short time stop from 50/60Hz) *8		20%: ≤ 60Hz			
			Capacitive feedback type, dynamic braking unit and braking resistor optional, individually installed			
	DC braking		Variable operating frequency, time, and braking force			
Weight	EU version (-HFEF2)	Kg	2.4	2.4	4.2	4.2
		lb	5.30	5.30	9.27	9.27
	USA version (-HFU2)	Kg	–	2.3	4.2	4.2
		lb	–	5.08	9.27	9.27

Torque characteristics

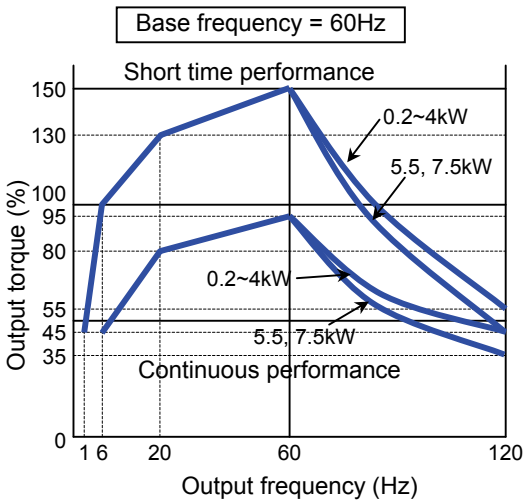

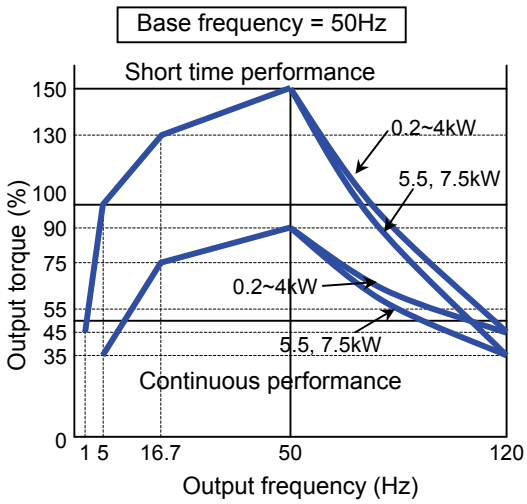

NOTE: The data are based on the Hitachi standard induction motor (4p). The torque performance depends on the characteristics of the motor to be used.

General Specifications

The following table applies to all X200₂ inverters.

Item			General Specifications
Protective housing *1			IP20
Control method			Sinusoidal Pulse Width Modulation (PWM) control
Carrier frequency			2kHz to 12kHz (default setting: 3kHz)
Output frequency range *4			0.5 to 400Hz
Frequency accuracy			Digital command: 0.01% of the maximum frequency Analog command: 0.4% of the maximum frequency (25°C ± 10°C)
Frequency setting resolution			Digital: 0.1Hz; Analog: max. frequency/1000
Volt./Freq. characteristic			V/f control (constant torque, reduced torque)
Overload capacity			150% rated current for 1 minute
Acceleration/deceleration time			0.01 to 3000 seconds, linear and S-curve accel/decel, second accel/decel setting available
Input signal	Freq. setting	Operator panel	Up and Down keys / Value settings
		Potentiometer	Analog setting
		External signal *9	0 to 10 VDC (input impedance 10k Ohms), 4 to 20mA (input impedance 250 Ohms), Potentiometer (1k to 2k Ohms, 2W)
	FWD/ REV run	Operator panel	Run/Stop (Forward/Reverse run change by command)
		External signal	Forward run/stop, Reverse run/stop
	Intelligent input terminal		**FW** (forward run command), **RV** (reverse run command), **CF1~CF4** (multi-stage speed setting), **JG** (jog command), **DB** (external braking), **SET** (set second motor), **2CH** (2-stage accel./decel. command), **FRS** (free run stop command), **EXT** (external trip), **USP** (startup function), **SFT** (soft lock), **AT** (analog current input select signal), **RS** (reset), **PTC** (thermistor thermal protection), **STA** (start), **STP** (stop), **F/R** (forward/reverse), **PID** (PID disable), **PIDC** (PID reset), **UP** (remote control up function), **DWN** (remote control down function), **UDC** (remote control data clearing), **OPE** (operator control), **ADD** (add frequency enable), **F-TM** (force terminal mode), **RDY** (Run ready), **SP-SET** (Special set) , **EMR** (Safe Stop)
Output signal	Intelligent output terminal		**RUN** (run status signal), **FA1,FA2** (frequency arrival signal), **OL** (overload advance notice signal), **OD** (PID error deviation signal), **AL** (alarm signal), **Dc** (analog input disconnect detect), **FBV** (PID two-stage control output), **NDc** (network detection signal), **LOG** (Logic output), **ODc** (comm. watchdog error), **LOC** (Low load)
	Frequency monitor		Analog output; Select output frequency or output current monitor
Alarm output contact			ON for inverter alarm (1c contacts, both normally open or closed avail.)
Other functions			AVR function, curved accel/decal profile, upper and lower limiters, 16-stage speed profile, fine adjustment of start frequency, carrier frequency change (2 to 12kHz) *10, frequency jump, gain and bias setting, process jogging, electronic thermal level adjustment, retry func., trip history monitor, 2nd setting select, fan ON/OFF selection.
Protective function			Over-current, over-voltage, under-voltage, overload, extreme high temperature, CPU error, memory error, ground fault detection at startup, electronic thermal
Operating environment	Temperature		Operating (ambient): -10 to 40°C(*10), / Storage: -20 to 65°C(*11)
	Humidity		20 to 90% humidity (non-condensing)
	Vibration *12		5.9m/s² (0.6G), 10 to 55 Hz
	Location		Altitude 1,000m or less, indoors (no corrosive gasses or dust)
Coating color			Blue
Options			Remote operator unit, copy unit, cables for the units, braking unit, braking resistor, AC reactor, DC reactor, noise filter

Signal Ratings

Detailed ratings are in “Control Logic Signal Specifications” on page 4-6.

Signal / Contact	Ratings
Built-in power for inputs	24VDC, 30mA maximum
Discrete logic inputs	27VDC maximum
Discrete logic outputs	50mA maximum ON state current, 27 VDC maximum OFF state voltage
Analog output	0 to 10VDC, 1mA, ± 10%(at25°C ± 10°C)
Analog input, current	4 to 19.6 mA range, 20mA nominal
Analog input, voltage	0 to 9.8 VDC range, 10VDC nominal, input impedance 10kΩ
+10V analog reference	10VDC nominal, 10mA maximum
Alarm relay contacts	250 VAC, 2.5A (R load) max., 0.2A (I load, P.F.=0.4) max. 100 VAC, 10mA min 30 VDC, 3.0A (R load) max., 0.7A (I load, P.F.=0.4) max.) 5 VDC, 100mA min.

Derating Curves

The maximum available inverter current output is limited by the carrier frequency and ambient temperature. The carrier frequency is the inverter's internal power switching frequency, settable from 2kHz to 12kHz. Choosing a higher carrier frequency tends to decrease audible noise, but it also increases the internal heating of the inverter, thus decreasing (derating) the maximum current output capability. Ambient temperature is the temperature just outside the inverter housing—such as inside the control cabinet where the inverter is mounted. A higher ambient temperature decreases (derates) the inverter's maximum current output capacity.

An inverter may be mounted individually in an enclosure or side-by-side with other inverter(s)As shown below. Side-by-side mounting causes greater derating than mounting inverters separately. Graphs for either mounting methods are included in this section. Refer to "Ensure Adequate Ventilation" on page 2-10 for minimum clearance dimensions for both mounting configurations.

Individual mounting

Side-by-side mounting

Use the following derating curves to help determine the optimal carrier frequency setting for your inverter and find the output current derating. Be sure to use the proper curve for your particular X2002 inverter model number.

Legend for Graphs:

- ——— Ambient temperature 40°C max., individual mounting
- ····· Ambient temperature 50°C max., individual mounting
- —·—·— Ambient temperature 40°C max., side-by-side mounting

Derating curves:

X200-002SFEF2/NFU2

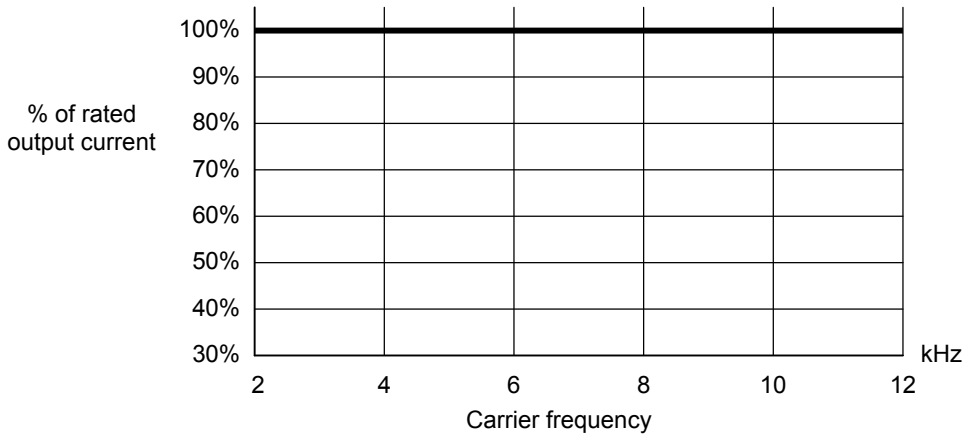

X200-004SFEF2/NFU2

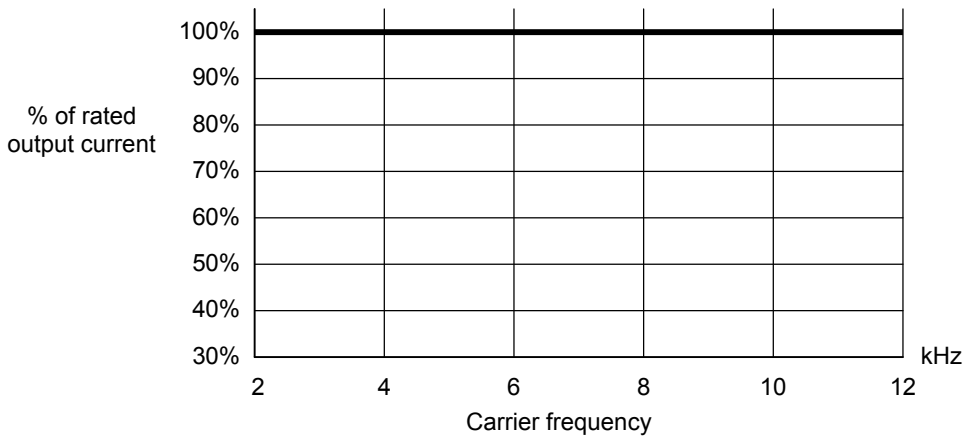

X200-005SFEF2

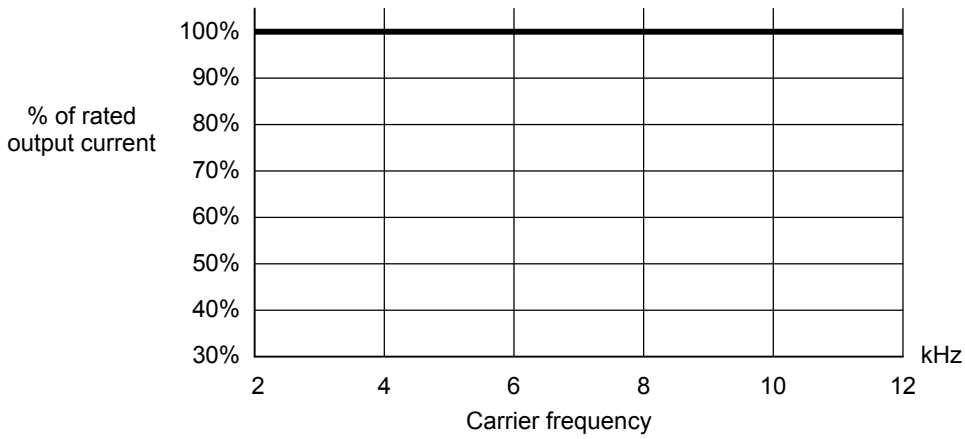

Derating curves, continued…

X200-007SFEF2/NFU2

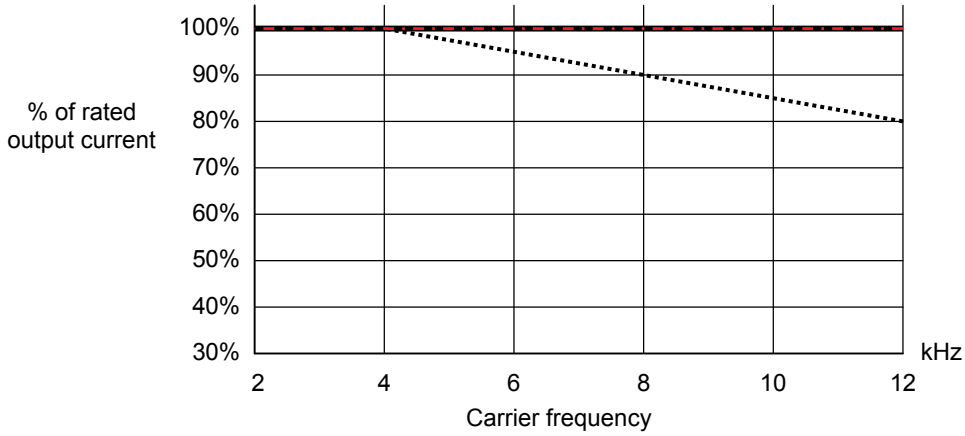

X200-011SFEF2

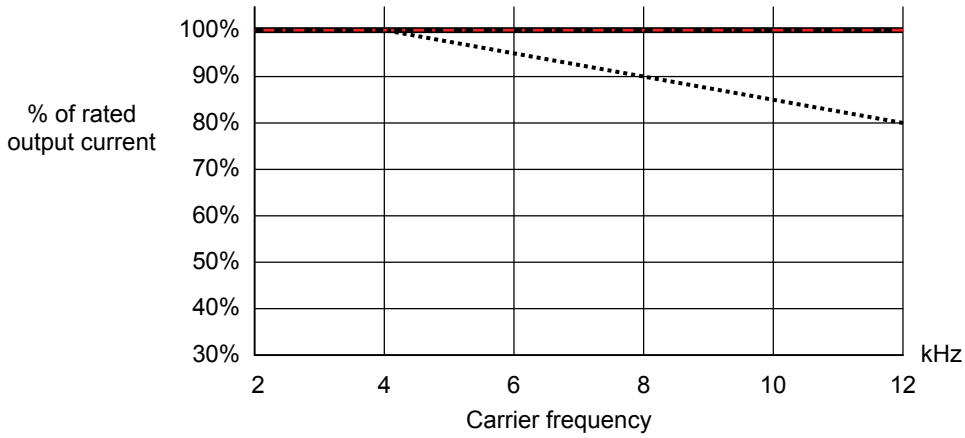

X200-015SFEF2/NFU2

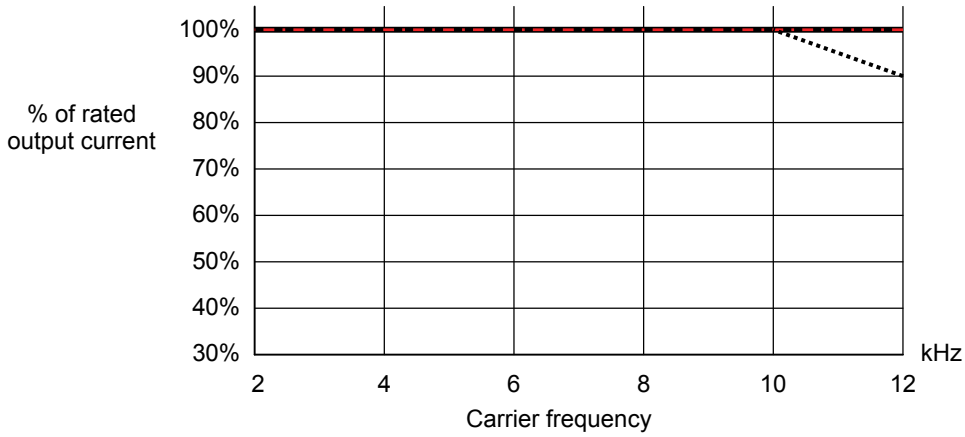

Derating curves, continued…

X200-022SFEF2/NFU2

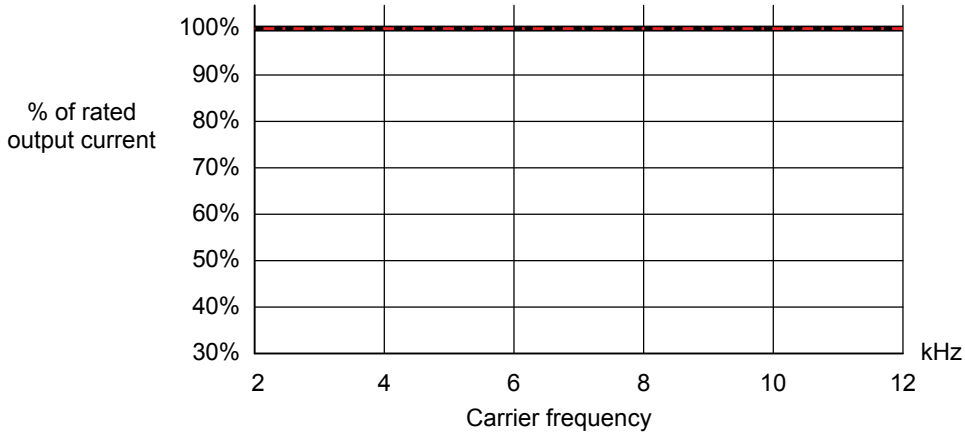

X200-037LFU2

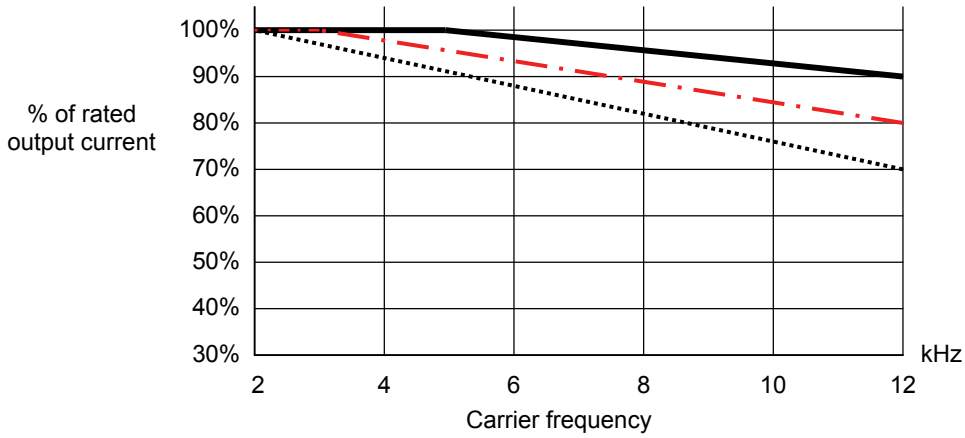

X200-055LFU2

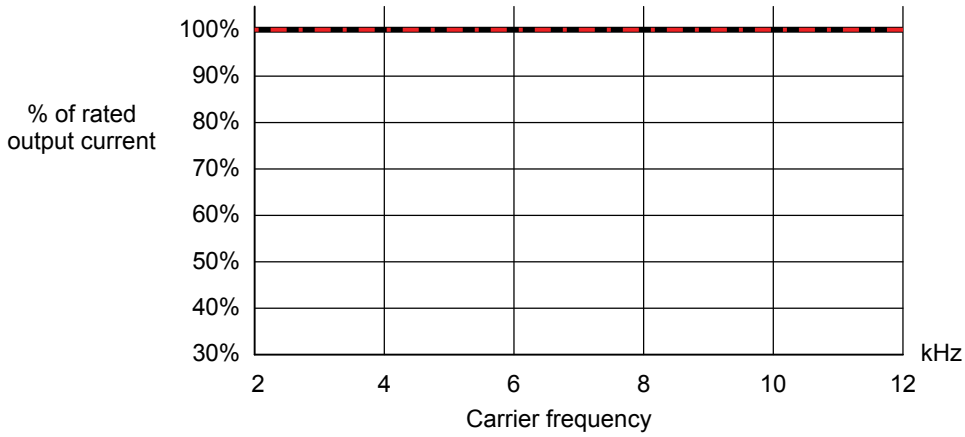

Derating curves, continued…

X200-075LFU2

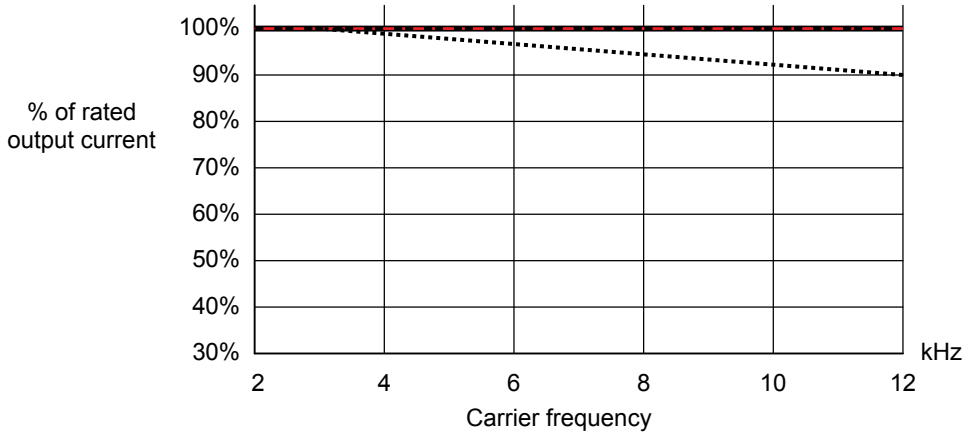

X200-004HFEF2/HFU2

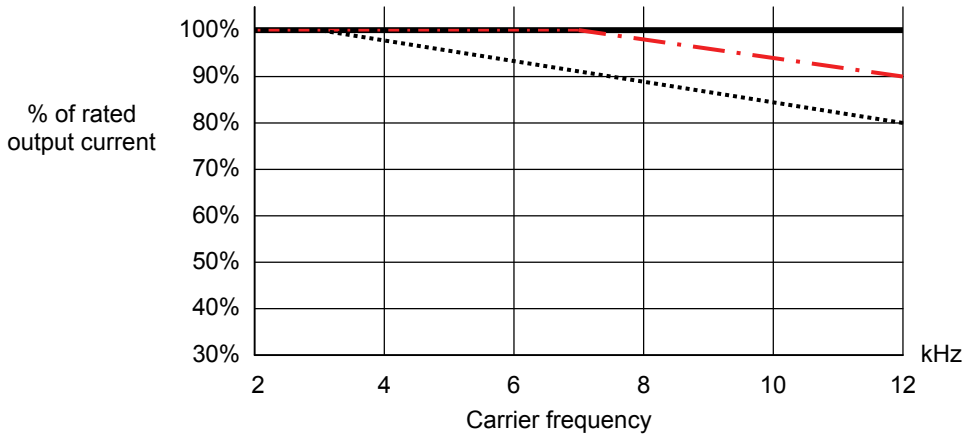

X200-007HFEF2/HFU2

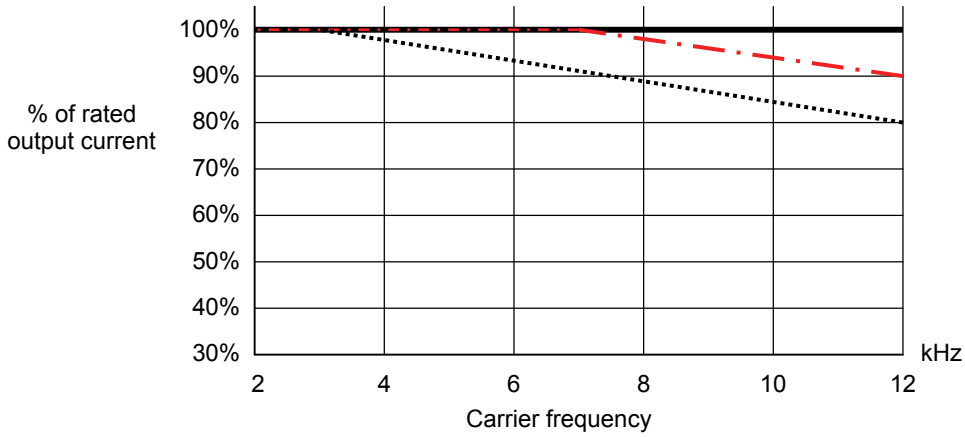

Derating curves, continued…

X200-015HFEF2/HFU2

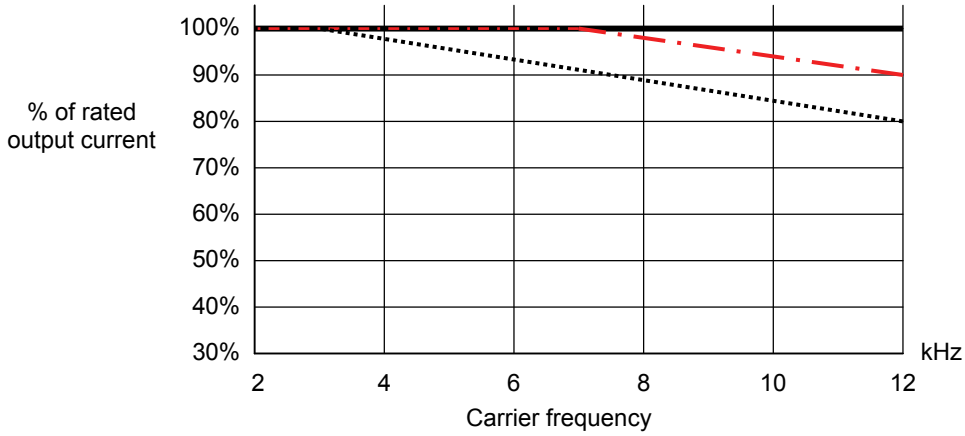

X200-022HFEF2/HFU2

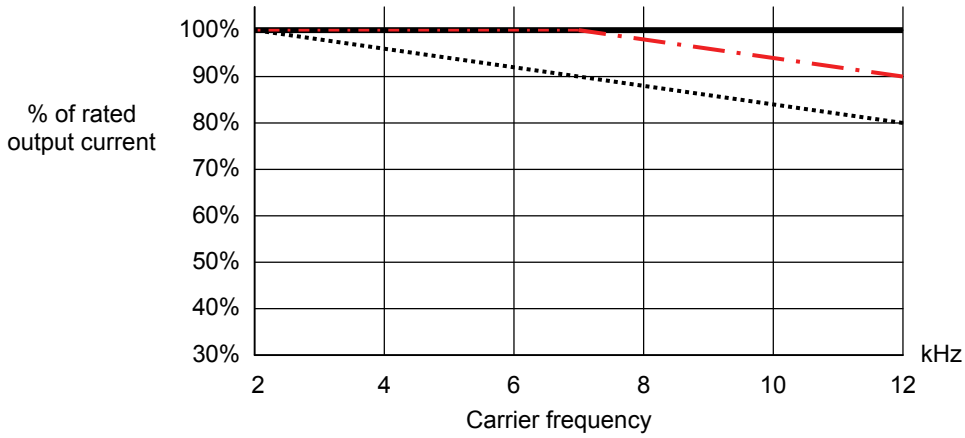

X200-030HFEF2

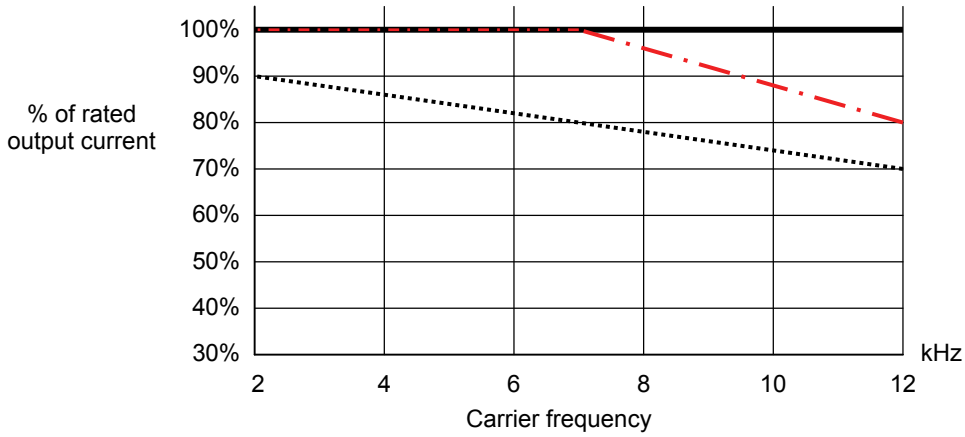

Derating curves, continued…

X200-040HFEF2/HFU2

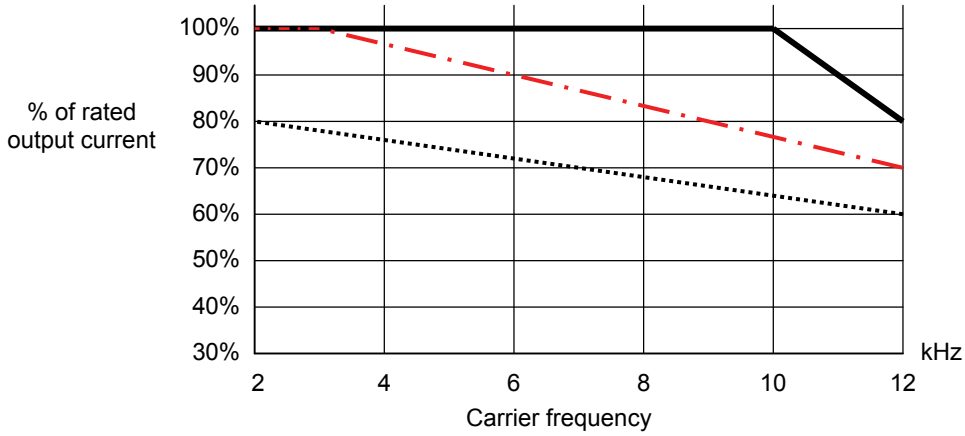

X200-055HFEF2/HFU2

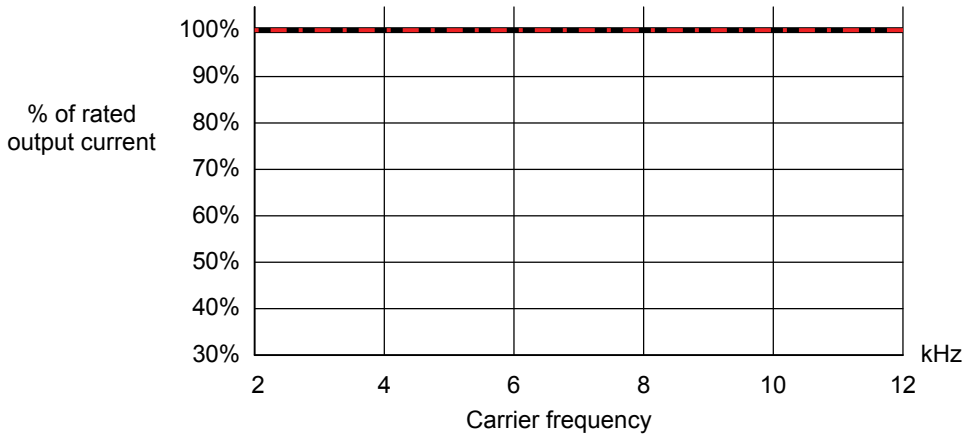

X200-075HFEF2/HFU2

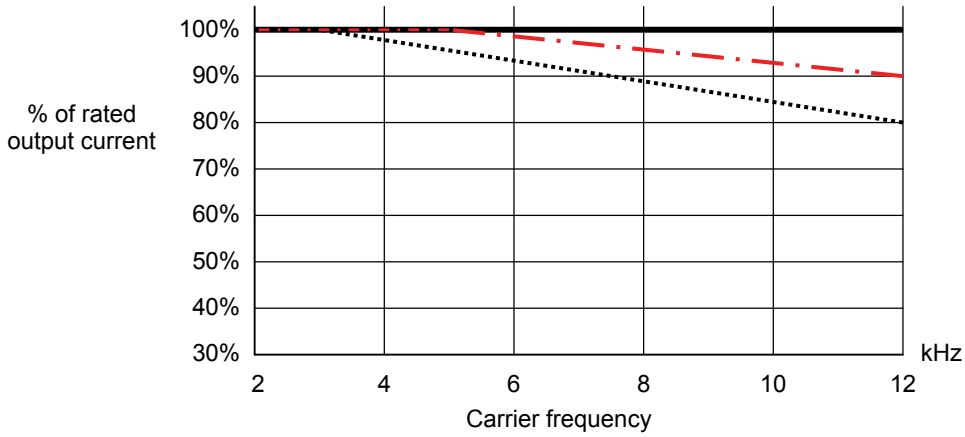

Introduction to Variable-Frequency Drives

The Purpose of Motor Speed Control for Industry

Hitachi inverters provide speed control for 3-phase AC induction motors. You connect AC power to the inverter, and connect the inverter to the motor. Many applications benefit from a motor with variable speed, in several ways:

- Energy savings – HVAC
- Need to coordinate speed with an adjacent process – textile and printing presses
- Need to control acceleration and deceleration (torque)
- Sensitive loads – elevators, food processing, pharmaceuticals

What is an Inverter

The term *inverter* and *variable-frequency drive* are related and somewhat interchangeable. An electronic motor drive for an AC motor can control the motor's speed by *varying the frequency* of the power sent to the motor.

An inverter, in general, is a device that converts DC power to AC power. The figure below shows how the variable-frequency drive employs an internal inverter. The drive first converts incoming AC power to DC through a rectifier bridge, creating an internal DC bus voltage. Then the inverter circuit converts the DC back to AC again to power the motor. The special inverter can vary its output frequency and voltage according to the desired motor speed.

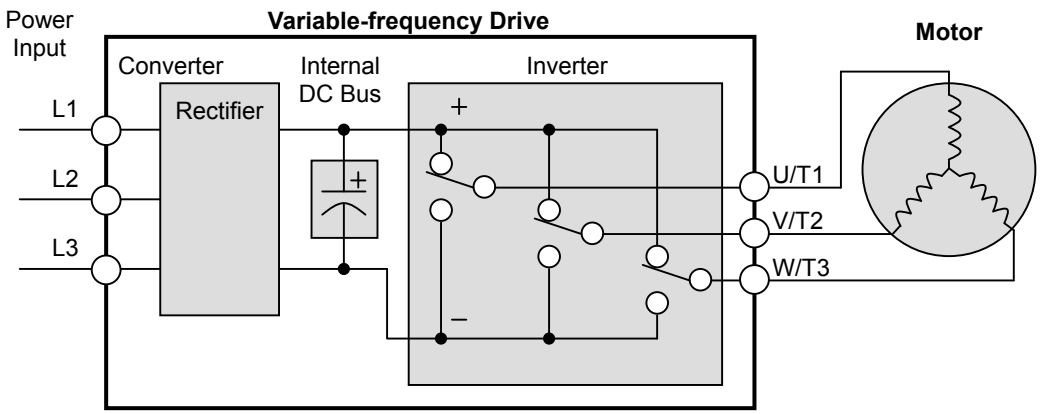

The simplified drawing of the inverter shows three double-throw switches. In Hitachi inverters, the switches are actually IGBTs (insulated gate bipolar transistors). Using a commutation algorithm, the microprocessor in the drive switches the IGBTs on and off at a very high speed to create the desired output waveforms. The inductance of the motor windings helps smooth out the pulses.

Torque and Constant Volts/Hertz Operation

In the past, AC variable speed drives used an open loop (scalar) technique to control speed. The constant-volts-hertz operation maintains a constant ratio between the applied voltage and the applied frequency. With these conditions, AC induction motors inherently delivered constant torque across the operating speed range. For some applications, this scalar technique was adequate.

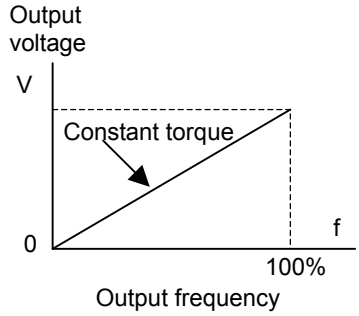

Today, with the advent of sophisticated microprocessors and digital signal processors (DSPs), it is possible to control the speed and torque of AC induction motors with unprecedented accuracy. The X2002 utilizes these devices to perform complex mathematical calculations required to achieve superior performance. You can choose various torque curves to fit the needs of your application. Constant torque applies the same torque level across the frequency (speed) range. *Variable torque*, also called *reduced torque*, lowers the torque delivered at mid-level frequencies. A torque boost setting will add additional torque in the lower half of the frequency range for the constant and variable torque curves. With the *free-setting torque* curve feature, you can specify a series of data points that will define a custom torque curve to fit your application.

Inverter Input and Three-phase Power

The Hitachi X2002 Series of inverters includes two sub-groups: the 200V class and the 400V class inverters. The drive described in this manual may be used in either the United States or Europe, although the exact voltage level for commercial power may be slightly different from country to country. Accordingly, a 200V class inverter requires (nominal) 200 to 240VAC, and 400V class inverter requires from 380 to 480VAC.
The 200V class inverters having a suffix of –SFEF2 accept single-phase 200V class input voltage, those with a –NFU2 suffix single- or three-phase power, and those with a suffix –LFU2 three-phase power only. All 400V class inverters require three-phase power supply.

TIP: If your application only has single phase power available, refer to X2002 inverter of 3HP or less (European version with a suffix of -SFE); they can accept single phase input power. Note: Larger models may be able to accept single-phase with derating. Contact your Hitachi distributor for assistance.

The common terminology for single phase power is line (L) and Neutral (N). Three-phase power connections are usually labeled Line 1 [R/L1], Line 2 [S/L2] and Line 3 [T/L3]. In any case, the power source should include an earth ground connection. That ground connection will need to connect to the inverter chassis and to the motor frame (see “Wire the Inverter Output to Motor” on page 2-21).

Inverter Output to the Motor

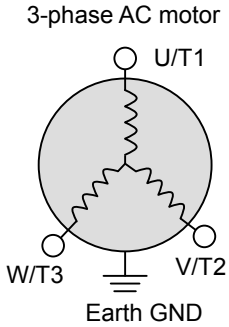

The AC motor must be connected only to the inverter's output terminals. The output terminals are uniquely labeled (to differentiate them from the input terminals) with the designations U/T1, V/T2, and W/T3. This corresponds to typical motor lead connection designations T1, T2, and T3. It is often not necessary to connect a particular motor lead for a new application. The consequence of swapping any two of the three connections is the reversal of the motor direction. In applications where reversed rotation could cause equipment damage or personnel injury, be sure to verify direction of rotation before attempting full-speed operation.
For safety to personnel, you must connect the motor chassis ground to the ground connection at the bottom of the inverter housing.

Notice the three connections to the motor do not include one marked "Neutral" or "Return". The motor represents a balanced "Y" impedance to the inverter, so there is no need for a separate return. In other words, each of the three "Hot" connections serves also as a return for the other connections, because of their phase relationship.

The Hitachi inverter is a rugged and reliable device. The intention is for the inverter to assume the role of controlling power to the motor during all normal operations. Therefore, this manual instructs you not to switch off power to the inverter *while the motor is running* (unless it is an emergency stop). Also, do not install or use disconnect switches in the wiring from the inverter to the motor (except thermal disconnect). Of course, safety-related devices such as fuses must be in the design to break power during a malfunction, as required by NEC and local codes.

Intelligent Functions and Parameters

Much of this manual is devoted to describing how to use inverter functions and how to configure inverter parameters. The inverter is micro-processor-controlled, and has many independent functions. The microprocessor has an on-board EEPROM for parameter storage. The inverter's front panel keypad provides access to all functions and parameters, which you can access through other devices as well. The general name for all these devices is the *digital operator, integrated operator,* or *digital operator panel*. Chapter 2 will show you how to get a motor running, using a minimal set of function commands or configuring parameters.

The optional read/write programmer will let you read and write inverter EEPROM contents from the programmer. This feature is particularly useful for OEMs who need to duplicate a particular inverter's settings in many other inverters in assembly-line fashion.

Braking

In general, braking is a force that attempts to slow or stop motor rotation. So it is associated with motor deceleration, but may also occur even when the load attempts to drive the motor faster than the desired speed (overhauling). If you need the motor and load to decelerate quicker than their natural deceleration during coasting, we recommend installing an optional dynamic braking unit. See "Introduction" on page 5-2 and "Dynamic Braking" on page 5-5 for more information on the BRD-E3 and BRD-EZ3 braking units. The X200$_2$ inverter sends excess motor energy into a resistor in the dynamic braking unit to slow the motor and load. For loads that continuously overhaul the motor for extended periods of time, the X200$_2$ may not be suitable (contact your Hitachi distributor).

The inverter parameters include acceleration and deceleration, which you can set to match the needs of the application. For a particular inverter, motor, and load, there will be a range of practically achievable accelerations and decelerations.

Velocity Profiles

The X2002 inverter is capable of sophisticated speed control. A graphical representation of that capability will help you understand and configure the associated parameters. This manual makes use of the velocity profile graph used in industry (shown at right). In the example, *acceleration* is a ramp to a set speed, and *deceleration* is a decline to a stop.

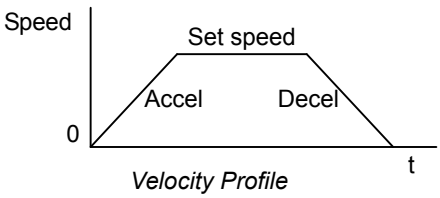

Velocity Profile

Acceleration and deceleration settings specify the time required to go from a stop to maximum frequency (or vise versa). The resulting slope (speed change divided by time) is the acceleration or deceleration. An increase in output frequency uses the acceleration slope, while a decrease uses the deceleration slope. The accel or decel time a particular speed change depends on the starting and ending frequencies.

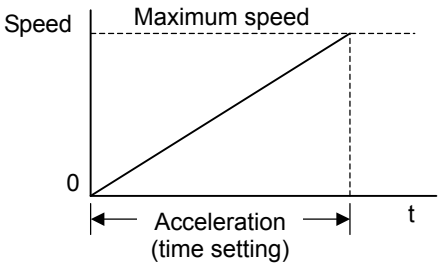

However, the slope is constant, corresponding to the full-scale accel or decel time setting. For example, the full-scale acceleration setting (time) may be 10 seconds – the time required to go from 0 to 60Hz.

The X2002 inverter can store up to 16 preset speeds. And, it can apply separate acceleration and deceleration transitions from any preset to any other preset speed. A multi-speed profile (shown at right) uses two or more preset speeds, which you can select via intelligent input terminals. This external control can apply any preset speed at any time.

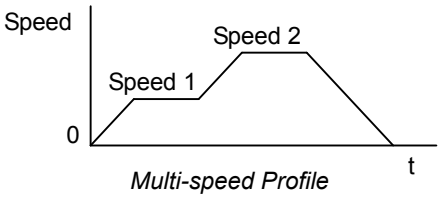

Multi-speed Profile

Alternatively, the selected speed is infinitely variable across the speed range. You can use the potentiometer control on the keypad for manual control. The drive accepts analog 0-10VDC signals and 4-20 mA control signals as well.

The inverter can drive the motor in either direction. Separate FW and RV commands select the direction of rotation. The motion profile example shows a forward motion followed by a reverse motion of shorter duration. The speed presets and analog signals control the magnitude of the speed, while the FWD and REV commands determine the direction before the motion starts.

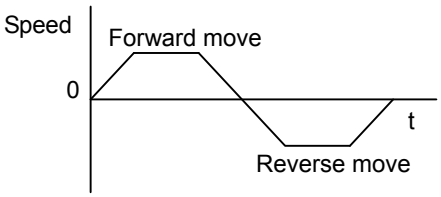

Bi-directional Profile

NOTE: The X2002 can move loads in both directions. However, it is not designed for use in servo-type applications that use a bipolar velocity signal that determines direction.

Frequently Asked Questions

Q. What is the main advantage in using an inverter to drive a motor, compared to alternative solutions?

A. An inverter can vary the motor speed with very little loss of efficiency, unlike mechanical or hydraulic speed control solutions. The resulting energy savings usually pays for the inverter in a relatively short time.

Q. The term "inverter" is a little confusing, since we also use "drive" and "amplifier" to describe the electronic unit that controls a motor. What does "inverter" mean?

A. The term *inverter, drive,* and *amplifier* are used somewhat interchangeably in industry. Nowadays, the term *drive*, *variable-frequency drive*, *variable-speed drive*, and *inverter* are generally used to describe electronic, microprocessor-based motor speed controllers. In the past, *variable-speed drive* also referred to various mechanical means to vary speed. *Amplifier* is a term almost exclusively used to describe drives for servo or stepper motors.

Q. Although the X2002 inverter is a variable speed drive, can I use it in a fixed-speed application?

A. Yes, sometimes an inverter can be used simply as a "soft-start" device, providing controlled acceleration and deceleration to a fixed speed. Other functions of the X2002 may be useful in such applications, as well. However, using a variable speed drive can benefit many types of industrial and commercial motor applications, by providing controlled acceleration and deceleration, high torque at low speeds, and energy savings over alternative solutions.

Q. Can I use an inverter and AC induction motor in a positioning application?

A. That depends on the required precision, and the slowest speed the motor must turn and still deliver torque. The X2002 inverter will deliver full torque while turning the motor at 6Hz (180RPM). DO NOT use an inverter if you need the motor to stop and hold the load position without the aid of a mechanical brake (use a servo or stepper motion control system).

Q. Can the inverter be controlled and monitored via a network?

A. Yes. X2002 inverters have built-in ModBus communications. See Appendix B for more information on network communications.

Q. Why does the manual or other documentation use terminology such as "200V class" instead of naming the actual voltage, such as "230 VAC"

A. A specific inverter model is set at the factory to work across a voltage range particular to the destination country for that model. The model specifications are on the label on the side of the inverter. A European 200V class inverter ("EU" marking) has different parameter settings than a USA 200V class.

NOTE: The European 200V class inverter is for single phase input (-SFEF2), while the USA 200V class inverter is for 3/single phase input (-NFU up to 2.2kW) and 3-phase input (-LFU2) 3.7kW.

Q. Why doesn't the motor have a neutral connection as a return to the inverter?

A. The motor theoretically represents a "balanced Y" load if all three stator windings have the same impedance. The Y connection allows each of the three wires to alternatively serve as input or return on alternate half-cycle.

Q. Does the motor need a chassis ground connection?

A. Yes, for several reasons. Most importantly, this provides protection in the event of a short in the motor that puts a hazardous voltage on its housing. Secondly, motors exhibit leakage current that increase with aging. Lastly, a grounded chassis generally emits less electrical noise than an ungrounded one.

Q. What type of motor is compatible with the Hitachi inverters?

A. **Motor type** – It must be a three-phase AC induction motor. Use an inverter-grade motor that has at least 800V insulation for 200V class inverters, or 1600V insulation for 400V class.
Motor size – In practice, it's better to find the right size motor for your application; then look for the inverter to match the motor.

NOTE: There may be other factors that will affect motor selection, including heat dissipation, motor operating speed profile, enclosure type, and cooling method.

Q. How many poles should the motor have?

A. Hitachi inverters can be configured to operate motors with 2, 4, 6, or 8 poles. The greater the number of the poles, the slower the top motor speed will be, but it will have higher torque at the base speed.

CALL NOW 800-985-6929 http://www.automatedpt.com Email: charles@automatedpt.com

Q. How will I know if my application will require resistive braking?

A. For new applications, it may be difficult to tell before you actually test a motor/drive solution. In general, some application can rely on system losses such as friction to serve as the deceleration force, or otherwise can tolerate a long decel time. These applications will not need dynamic braking.
However, applications with a combination of a high-inertia load and a required short decel time will need dynamic braking. This is a physics question that may be answered either empirically or through extensive calculations.

Q. Several options related to electrical noise suppression are available for the Hitachi inverters. How can I know if my application require any of these options?

A. The purpose of these noise filters is to reduce the inverter electrical noise so the operation of nearby electrical devices is not affected. Some applications are governed by particular regulatory agencies, and noise suppression is mandatory . in those cases, the inverter must have the corresponding noise filter installed. Other applications may not need noise suppression, unless you notice electrical interference with the operation of other devices.

Q. The X2002 features a PID control. PID loops are usually associated with chemical processes, heating, or process industries in general. How could the PID loop feature be useful in my application?

A. You will need to determine the particular main variable in your application the motor affects. That is the process variable (PV) for the motor. Over time, a faster motor speed will cause a faster change in the PV than a slow motor speed will. By using the PID loop feature, the inverter commands the motor to run at the optimal speed required to maintain the PV at the desired value for current conditions. Using the PID loop feature will require an additional sensor and other wiring, and is considered an advanced application.

CALL NOW 800-985-6929 http://www.automatedpt.com Email: charles@automatedpt.com

CALL NOW 800-985-6929 http://www.automatedpt.com Email: charles@aut

Inverter Mounting and Installation

2

In This Chapter… **page**

- **Orientation to Inverter Features** 2
- **Basic System Description** 7
- **Step-by-Step Basic Installation** 8
- **Powerup Test** 24
- **Using the Front Panel Keypad** 26

CALL NOW 800-985-6929 http://www.automatedpt.com Email: charles@automatedpt.com

Orientation to Inverter Features

Unpacking and Inspection

Please take a few moments to unpack your new X2002 inverter and perform these steps:

1. Look for any damage that may have occurred during transportation.
2. Verify the contents of the box include:
   a. One X2002 inverter
   b. One instruction Manual
   c. One X2002 Quick Reference Guide
3. Inspect the specifications label on the side of the inverter. Make sure it matches the product part number you ordered.

Main Physical Features

The X2002 Series inverters vary in size according to the current output rating and motor size for each model number. All feature the same basic Keypad and connector interface for consistent ease of use. The inverter construction has a heat sink at the back of the housing. The larger models include a fan to enhance heat sink performance. The mounting holes are predrilled in the heat sink for your convenience. Smaller models have two mounting holes, while larger ones have four. Be sure to use all the mounting holes provided.

Never touch the heat sink during or just after operation; it can be very hot.

The electronics housing and front panel are built onto the front of the heat sink.

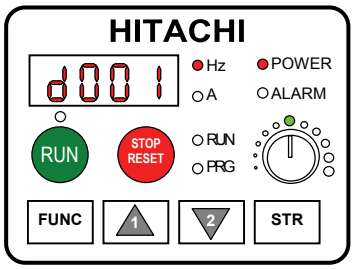

Inverter Keypad – The inverter uses a digital operator interface, or keypad. The four-digit display can show a variety of performance parameters. LEDs indicate whether the display units are Hertz or Amperes. Other LEDs indicate Power (external), and Run/Stop mode and Program/Monitor Mode status. Membrane keys Run and Stop/Reset, and an output frequency potentiometer (speed setting knob) control monitor operation. The FUNC., 1 and 2 keys allow an operator to navigate to the inverter's functions and parameter values. The Store key is used when changing a setting.

Front Housing Cover

HIGH VOLTAGE: Hazard of electrical shock. Disconnect incoming power before working on this control. Wait five (5) minutes before removing the front cover.

Housing Cover Removal – The front housing cover is held in place by a screw and two pairs of tabs. Since these tabs are hidden from view, it is good to become familiar with their locations *before* attempting to remove the cover. The figure below shows a typical housing cover in an upside-down position to reveal the tabs. The two locking tabs are the ones which you will need to press to remove the cover. The two hinging tabs will allow the cover to tilt open after the locking tabs are released.

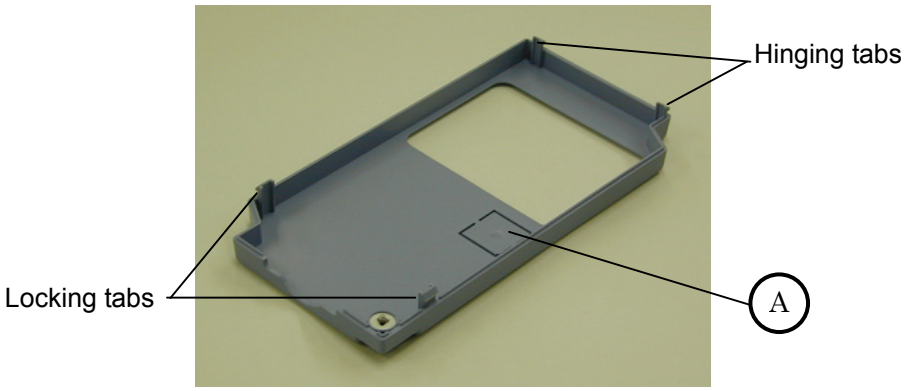

NOTE: Use care when removing the knock-out for the communication connector (indicated by A in above figure). After removal of the knock-out, some burrs may remain. Carefully file them smooth, if necessary.

The figure below shows the procedure for removing the housing cover. First, unscrew the screw, squeeze the side locking tabs, and then lift up the housing cover. DO NOT force the cover open; it is possible to break a tab in this way.

1. Unscrew the screw

2. Lift up the bottom side of the cover

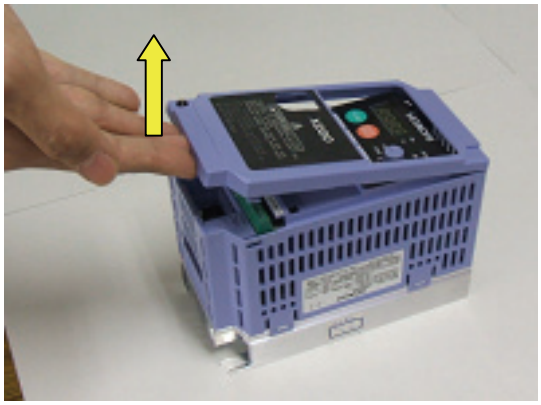

Logic Connector Introduction

After removing the front housing cover, take a moment to become familiar with the connectors, as shown below.

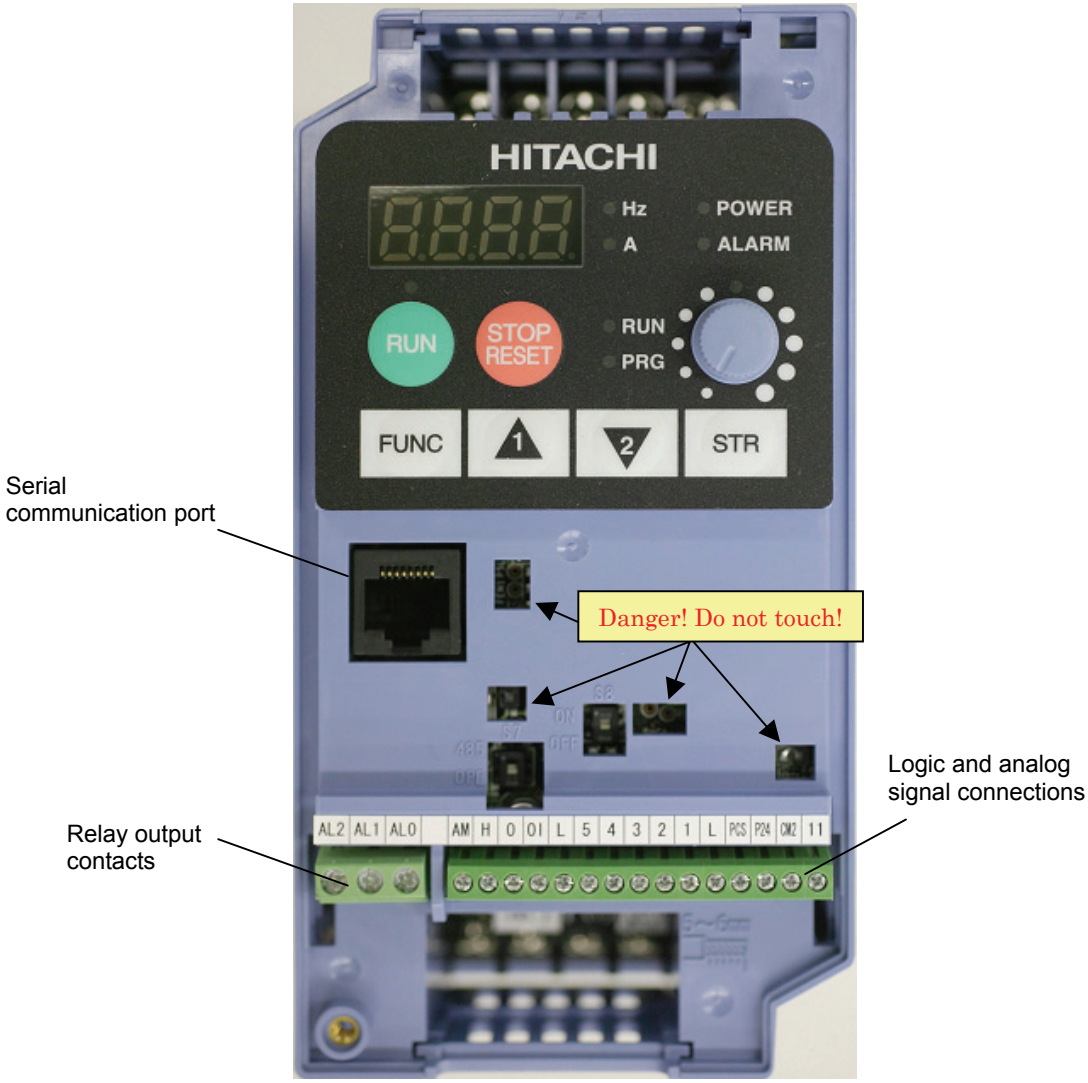

HIGH VOLTAGE: Hazard of electrical shock. Never touch the exposed PCB conductors while the unit is powered up. Also, the inverter must be powered OFF before you change any of the DIP switch settings.

DIP Switch Introduction

The inverter has internal DIP switches, located near the middle of the logic connectors as shown below. This section provides an introduction. Refer to later chapters that discuss the DIP switch operation in more detail.

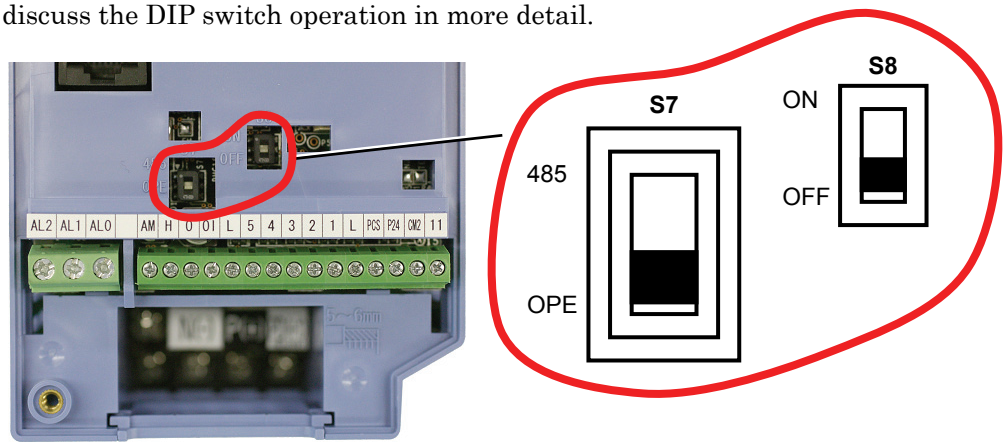

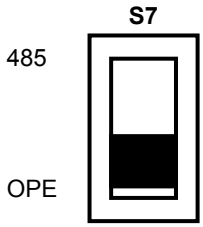

The 485/OPE (RS485/Operator) DIP switch configures the inverter's RJ45 serial port. You can use either the inverter's integrated keypad or the OPE-SRmini connected via a cable to the serial port. In this case, SW7 should be set OPE (default setting). The port is configured for RS422 in this setting. Inverter control via a ModBus network communication requires the "485" setting. See "Connecting the Inverter to ModBus" on page B-3 for more details.

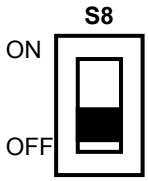

DIP switch SW8 controls the Safe Stop input. Turning this DIP switch ON will enable the inverter to receive a Safe stop signal from the dedicated safe stop terminal (#3). The inverter will shut off its output based on safety norm EN954-1 when a signal is given to this terminal. Additionally, the intelligent input terminal assignment will be changed automatically when SW8 is ON. See "Safe Stop" on page 4-32 for more details.

Power Wiring Access – First, ensure no power source is connected to the inverter. If power has been connected, verify that the Power LED is OFF and then wait five minutes after power down to proceed. After removing the front housing cover, the two housing partitions that cover the power and motor wiring exits will be able to slide upward as shown to the right. The upper cover is for main power input wiring, and the lower one is for the motor output wiring.

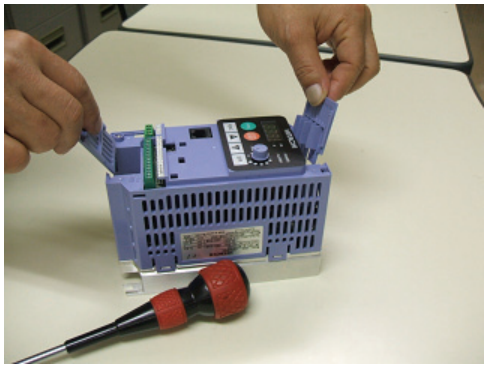

Notice the four wire exit slots in the housing partition. This helps keep the power and motor wiring (to the left) separated from the signal-level logic or analog wiring (to the right).

Remove the housing partitions and as shown as set them aside in a secure place while wiring. Be sure to replace them afterward. Never operate the inverter with the partition removed or the front housing cover removed.

The power input mains connect to the terminals at the top of the inverter, and the motor 3-phase leads connect to the lower row of the terminals at the bottom of the inverter. The upper row of the bottom terminals connect to optional braking units or DC link choke.

The following section in this chapter will describe system design and guide you through a step-by-step installation process. After the section on wiring, this chapter will show how to use the front panel keys to access functions and edit parameters.

CALL NOW 800-985-6929 http://www.automatedpt.com Email: charles@aut

Basic System Description

A motor control system will obviously include a motor and inverter, as well as a circuit breaker or fuses for safety. If you are connecting a motor to the inverter on a test bench just to get started, that's all you may need for now. But a system can also have a variety of additional components. Some can be for noise suppression, while others may enhance the inverter's braking performance. The figure and table below show a system with all the **optional** components you might need in your finished application.

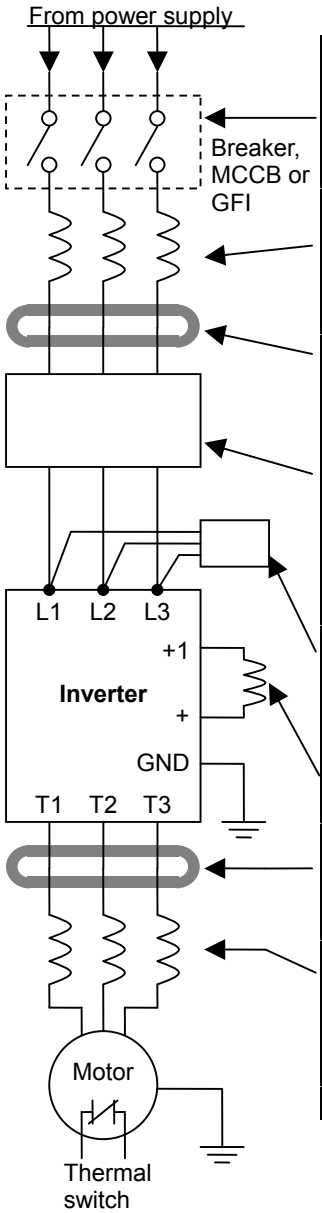

Name	Function
Breaker / disconnect	A molded-case circuit breaker (MCCB), ground fault interrupter (GFI), or a fused disconnect device. NOTE: The installer must refer to the NEC and local codes to ensure safety and compliance.
Input-side AC Reactor	This is useful in suppressing harmonics induced on the power supply lines and for improving the power factor. **WARNING:** Some applications *must* use an input-side AC Reactor to prevent inverter damage. See Warning on next page.
Radio noise filter	Electrical noise interference may occur on nearby equipment such as a radio receiver. This magnetic choke filter helps reduce radiated noise (can also be used on output).
EMI filter (for CE applications, see Appendix D)	Reduces the conducted noise on the power supply wiring between the inverter and the power distribution system. Connect to the inverter primary (input) side. EU version (with a suffix of -FEF have integrated EMC Filter, which is category C1 for 200V class and C2 for 400V class.)
Radio noise filter (use in non-CE applications)	This capacitive filter reduces radiated noise from the main power wires in the inverter input side.
DC link choke	Suppress harmonics generated by the inverter. However, it will not protect the input diode bridge rectifier.
Radio noise filter	Electrical noise interference may occur on nearby equipment such as a radio receiver. This magnetic choke filter helps reduce radiated noise (can also be used on input).
Output-side AC Reactor	This reactor reduces the vibration in the motor caused by the inverter's switching waveforms, by smoothing the waveform to approximate commercial power quality. It is also useful to reduce harmonics when wiring from the inverter to the motor is more than 10m in length.
LCR filter	Sine wave shaping filter for output side.

NOTE: Note that some components are required for regulatory agency compliance (see Chapter 5 and Appendix D).

CALL NOW 800-985-6929 http://www.automatedpt.com Email: charles@automatedpt.com

WARNING: In the cases below involving a general-purpose inverter, a large peak current can flow on the power supply side, sometimes destroying the converter module:

1. The unbalance factor of the power supply is 3% or higher.
2. The power supply capacity is at least 10 times greater than the inverter capacity (or the power supply capacity is 500kVA or more).
3. Abrupt power supply changes are expected, due to conditions such as:
   a. Several inverters are interconnected with a short bus.
   b. A thyristor converter and an inverter are interconnected with a short bus.
   c. An installed phase advance capacitor opens and closes.

Where these conditions exist or when the connected equipment must be highly reliable, you MUST install an input-side AC reactor of 3% (at a voltage drop at rated current) with respect to the supply voltage on the power supply side. Also, where the effects of an indirect lightning strike are possible, install a lightning conductor.

Step-by-Step Basic Installation

This section will guide you through the following basic steps of installation:

Step	Activity	Page
1	Choose a mounting location in compliance with the Warnings and Cautions. See NOTE below.	2-9
2	Check the mounting location for adequate ventilation	2-10
3	Cover the inverter's ventilation openings to prevent debris from entering.	2-10
4	Check the inverter dimensions for footprint and mounting hole locations.	2-11
5	Study the Cautions, Warnings, wire and fuse sizes, and terminal torque specifications before wiring the inverter.	2-16
6	Connect wiring for the inverter power input.	2-17
7	Wire the inverter output to the motor.	2-21
8	Uncover the inverter's ventilation openings applied in Step 3.	2-22
9	Perform the Powerup Test. (This step includes several sub steps.)	2-22
10	Make observations and check your installation.	2-33

NOTE: If the installation is in an EU country, study the EMC installation guidelines in Appendix D.

Choosing a Mounting Location

Step 1: Study the following caution messages associated with mounting the inverter. This is the time when mistakes are most likely to occur that will result in expensive rework, equipment damage, or personal injury.

CAUTION: Be sure to install the unit on flame-resistant material such as steel plate. Otherwise, there is the danger of fire.

CAUTION: Be sure not to place any flammable materials near the inverter. Otherwise, there is the danger of fire.

CAUTION: Be sure not to let the foreign matter enter vent openings in the inverter housing, such as wire clippings, spatter from welding, metal shavings, dust, etc. Otherwise, there is the danger of fire.

CAUTION: Be sure to install the inverter in a place that can bear the weight according to the specifications in the text (Chapter 1, Specifications Tables). Otherwise, it may fall and cause injury to personnel.

CAUTION: Be sure to install the unit on a perpendicular wall that is not subject to vibration. Otherwise, it may fall and cause injury to personnel.

CAUTION: Be sure not to install or operate an inverter that is damaged or has missing parts. Otherwise, it may cause injury to personnel.

CAUTION: Be sure to install the inverter in a well-ventilated room that does not have direct exposure to sunlight, a tendency for high temperature, high humidity or dew condensation, high levels of dust, corrosive gas, explosive gas, inflammable gas, grinding-fluid mist, salt damage, etc. Otherwise, there is the danger of fire.

Ensure Adequate Ventilation

Step 2: To summarize the caution messages – you will need to find a solid, non-flammable, vertical surface that is in a relatively clean and dry environment. In order to ensure enough room for air circulation around the inverter to aid in cooling, maintain the specified clearance and the inverter specified in the diagram.

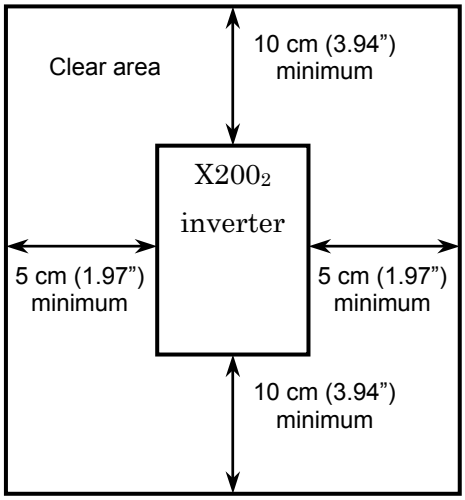

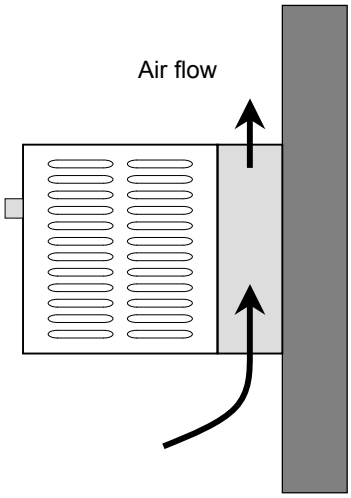

CAUTION: Be sure to maintain the specified clearance area around the inverter and to provide adequate ventilation. Otherwise, the inverter may overheat and cause equipment damage or fire.

Keep Debris Out of Inverter Vents

Step 3: Before proceeding to the wiring section, it’s a good time to *temporarily* covers the inverter’s ventilation openings. Paper and masking tape are all that is needed. This will prevent harmful debris such as wire clippings and metal shavings from entering the inverter during installation.

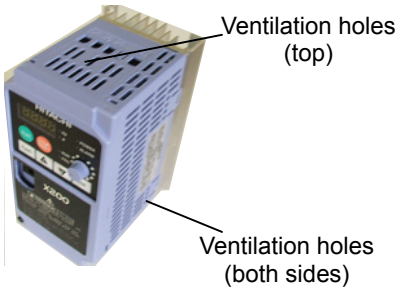

Please observe this checklist while mounting the inverter:

1. The ambient temperature must be in the range of –10 to 40°C.
2. Keep any other heat-producing equipment as far away from the inverter as possible.
3. When installing the inverter in an enclosure, maintain the clearance around the inverter and verify that its ambient is within specification when the enclosure door is closed.
4. Do not remove the front housing at any time during operation.

Check Inverter Dimensions

Step 4: Locate the applicable drawing on the following pages for your inverter. Dimensions are given in millimeters (inches) format.

X200-002SFEF2, -004SFEF2, -002NFU2, -004NFU2

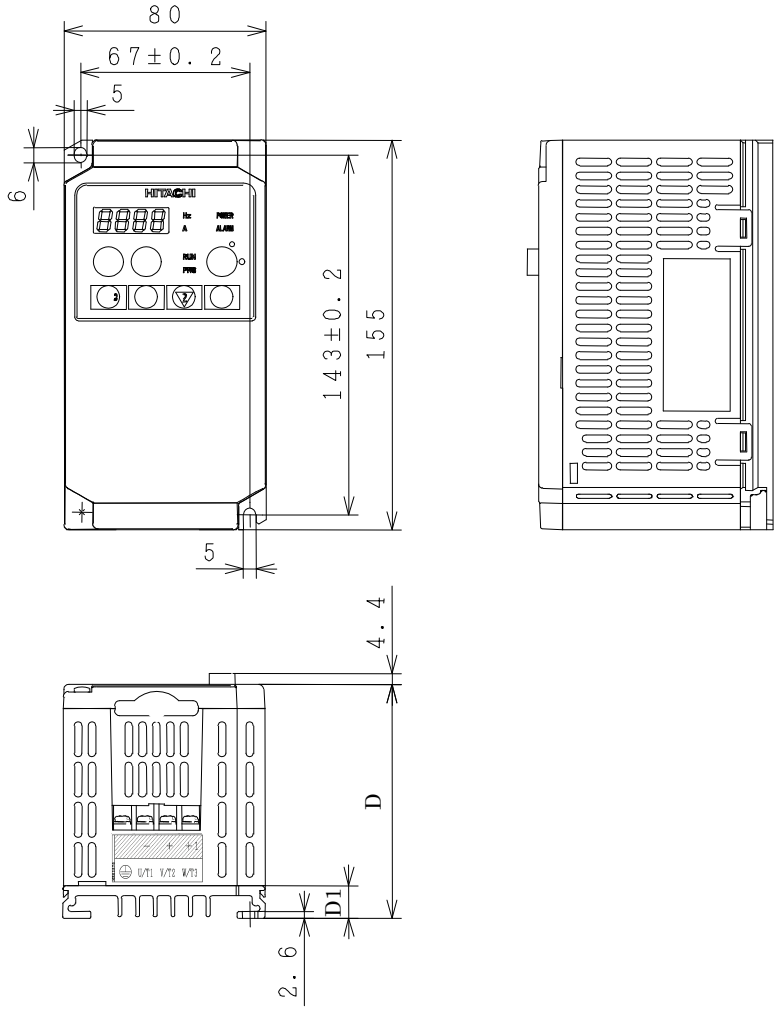

D [mm]	D1 [mm]	Applied model
93	13	-002NFU2, -002SFEF2
107	27	-004NFU2, -004SFEF2

NOTE: Some inverter housing require two mounting screws, while other requires four. Be sure to use lock washers or other means to ensure screws do not loosen due to vibration.

CAUTION: Power terminal assignment is different compared to old models such as L100, L200 series, etc,. Pay attention when wiring the power cable

Dimensional drawings, continued…

X200-005SFEF2,007SFEF2, -007NFU2

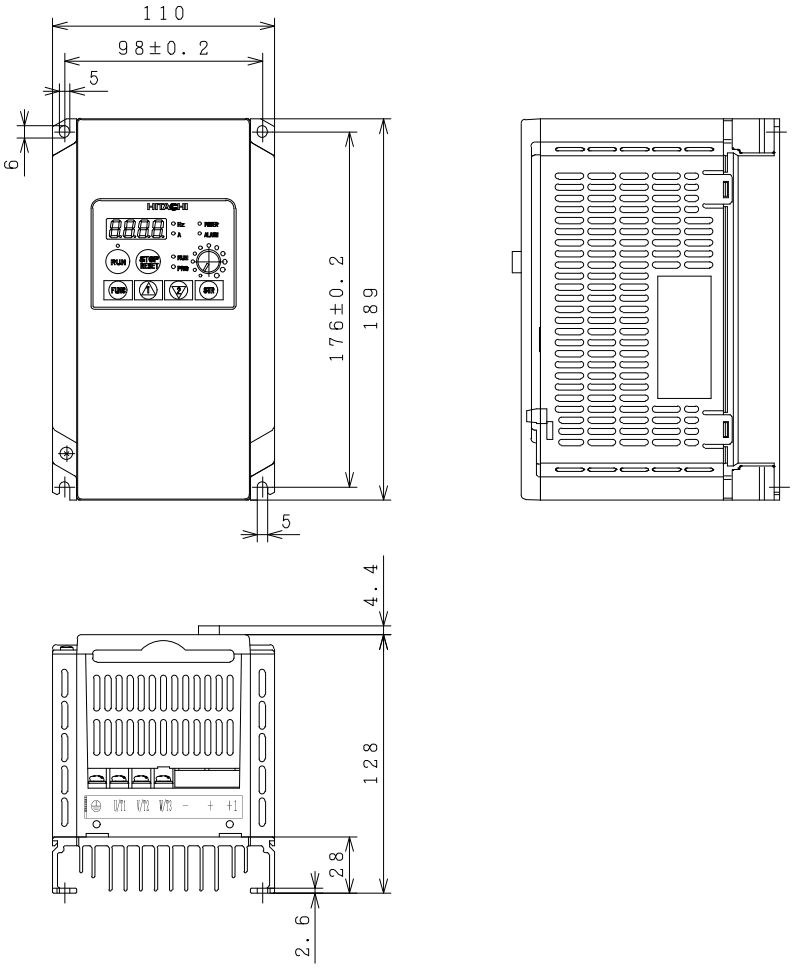

CAUTION: Power terminal assignment is different compared to old models such as L100, L200 series, etc,. Pay attention when wiring the power cable

Dimensional drawings, continued…

X200-011SFEF2~022SFEF2, -015NFU2~022NFU2, -037LFU2

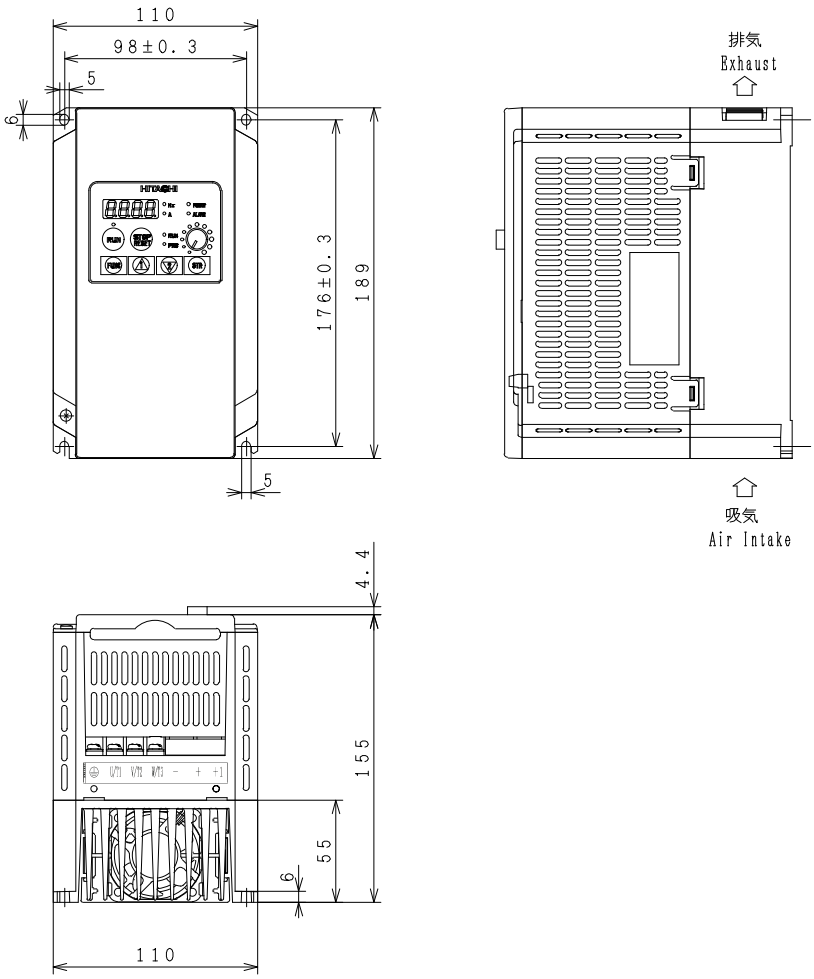

CAUTION: Power terminal assignment is different compared to old models such as L100, L200 series, etc,. Pay attention when wiring the power cable

Dimensional drawings, continued…

X200-004HFEF2, -004HFU2

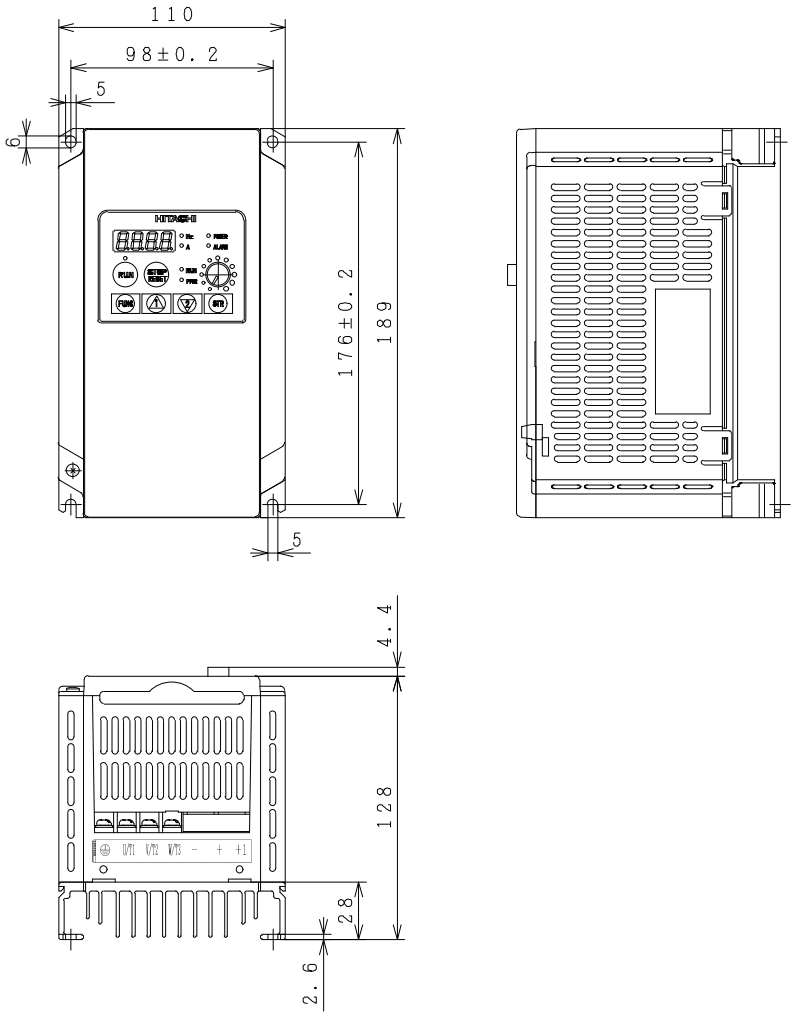

CAUTION: Power terminal assignment is different compared to old models such as L100, L200 series, etc,. Pay attention when wiring the power cable

Dimensional drawings, continued…

X200-007HFEF2, -007HFU2

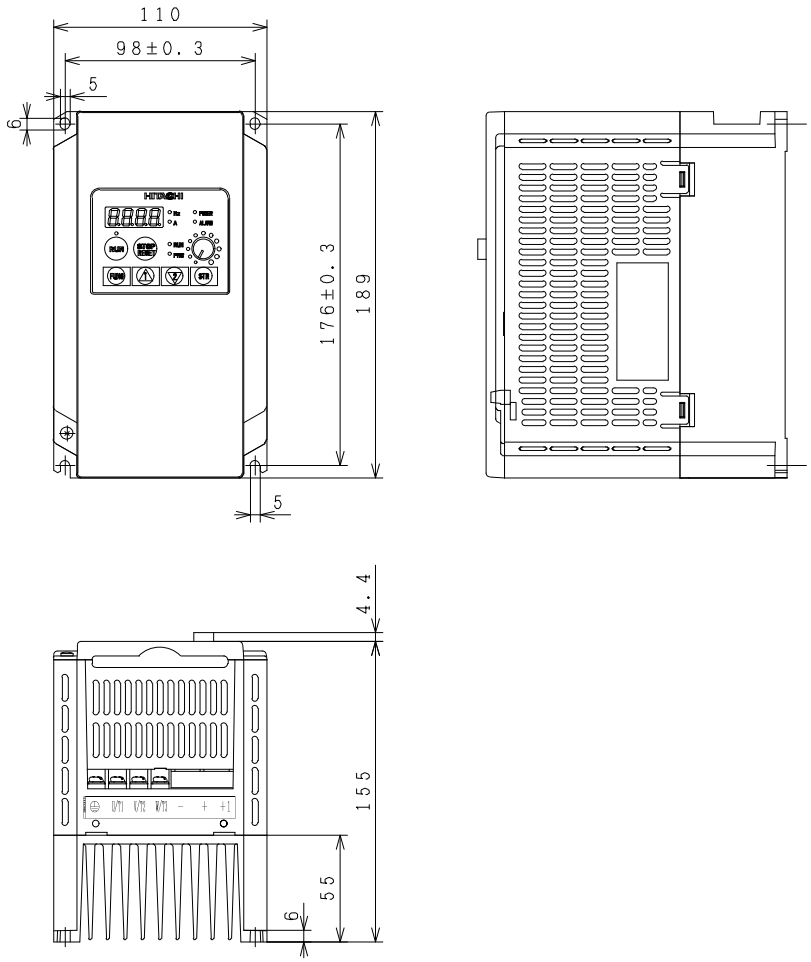

CAUTION: Power terminal assignment is different compared to old models such as L100, L200 series, etc,. Pay attention when wiring the power cable

Dimensional drawings, continued…

X200-015HFEF2~040HFEF2, -015HFU2~040HFU2

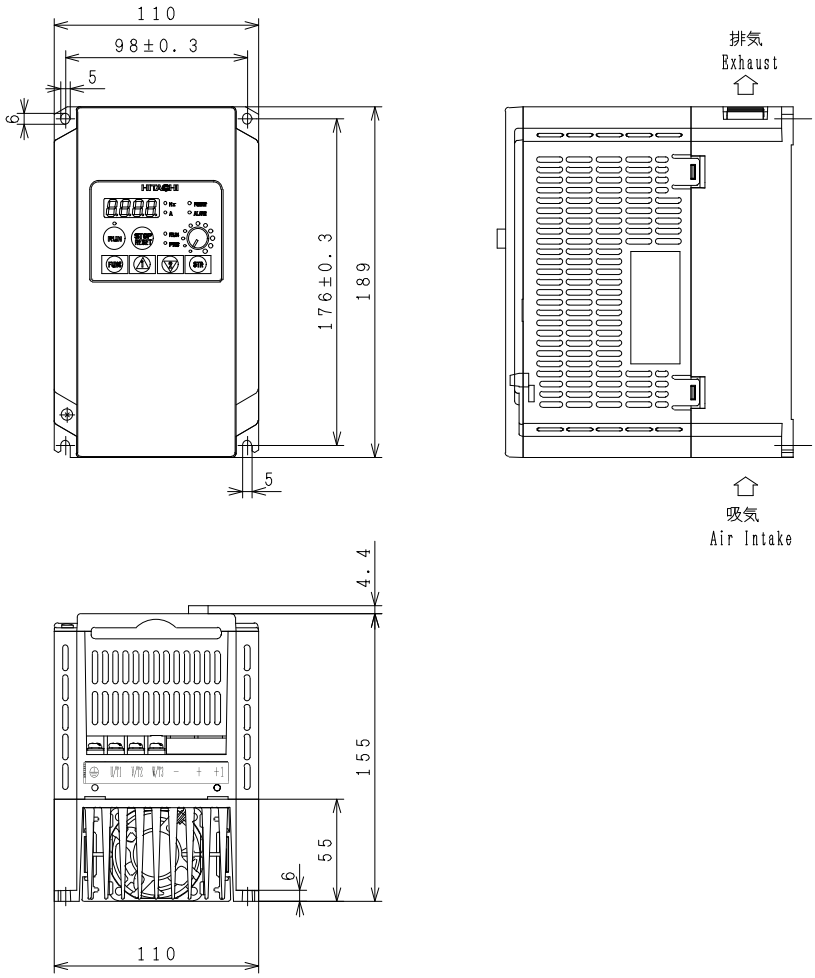

CAUTION: Power terminal assignment is different compared to old models such as L100, L200 series, etc,. Pay attention when wiring the power cable

Dimensional drawings, continued…

X200-055LFU2, -075LFU2, -055HFU2, -075HFU2, -055HFEF2, -075HFEF2

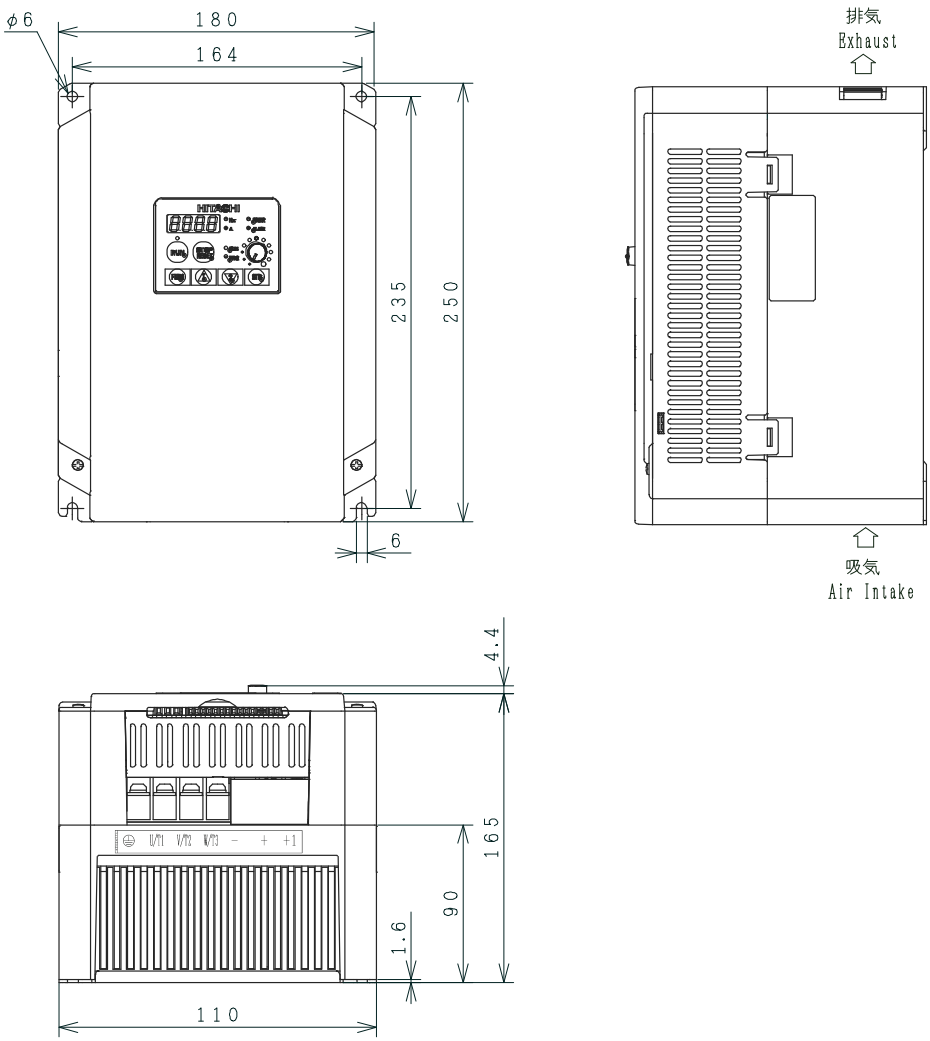

CAUTION: Power terminal assignment is different compared to old models such as L100, L200 series, etc,. Pay attention when wiring the power cable

Prepare for Wiring

Step 5: It is very important to perform the wiring steps carefully and correctly. Before proceeding, please study the caution and warning message herebelow.

WARNING: "USE 60/75°C Cu wire only" or equivalent. For models X200-005S, -007S, -011S, -022S, 007N, -015N, 015L, -022L, -037L.

WARNING: "USE 75°C Cu wire only" or equivalent. For models X200-002S, -004S, 002N, -004N, 002L, -004L, -007L, -022H, -030H, 037H and X200-040H.

WARNING: "USE 60°C Cu wire only" or equivalent. For models X200-004H, -007H, and –015H.

WARNING: "Open Type Equipment."

WARNING: "Suitable for use on a circuit capable of delivering not more than 100k rms symmetrical amperes, 240V maximum." For models with suffix S, N or L.

WARNING: "Suitable for use on a circuit capable of delivering not more than 100k rms symmetrical amperes, 480V maximum." For models with suffix H.

HIGH VOLTAGE: Be sure to ground the unit. Otherwise, there is a danger of electric shock and/or fire.

HIGH VOLTAGE: Wiring work shall be carried out only by qualified personnel. Otherwise, there is a danger of electric shock and/or fire.

HIGH VOLTAGE: Implement wiring after checking that the power supply is OFF. Otherwise, you may incur electric shock and/or fire.

HIGH VOLTAGE: Do not connect wiring to an inverter or operate an inverter that is not mounted according to the instructions given in this manual. Otherwise, there is a danger of electric shock and/or injury to personnel.

Determining Wire and Fuse Sizes

The maximum motor currents in your application determines the recommended wore size. The following table gives the wire size in AWG. The "Power Lines" column applies to the inverter input power, output wires to the motor, the earth ground connection, and any other components shown in the "Basic System Description" on page 2-7. The "Signal Lines" column applies to any wire connecting to the two green connectors just inside the front cover panel.

Motor Output		Inverter Model	Wiring		Applicable equipment
kW	HP		Power Lines	Signal Lines	Fuse (UL-rated, class J, 600V)
0.2	1/4	X200-002SFEF2/NFU2	AWG14 / 2.1mm²	18 to 28 AWG / 0.14 to 0.75 mm² shielded wire (see Note 4)	10A
0.4	1/2	X200-004SFEF2/NFU2			10A
0.55	3/4	X200-005SFEF2			10A
0.75	1	X200-007SFEF2/NFU2			15A
1.1	1 1/2	X200-011SFEF2	AWG10 / 5.3mm²		15A
1.5	2	X200-015SFEF2/NFU2			20A
2.2	3	X200-022SFEF2/NFU2			30A
3.7	5	X200-037LFU2	AWG12 / 3.3mm²		30A
5.5	7 1/2	X200-055LFU2	AWG10 / 5.3mm²		40A
7.5	10	X200-075LFU2	AWG8 / 8.4mm²		50A
0.4	1/2	X200-004HFEF2/HFU2	AWG16 / 1.3mm²		3A
0.75	1	X200-007HFEF2/HFU2			6A
1.5	2	X200-015HFEF2/HFU2			10A
2.2	3	X200-022HFEF2/HFU2	AWG14 / 2.1mm² (60°C only)		
3.0	4	X200-030HFEF2			15A
4.0	5	X200-040HFEF2/HFU2			
5.5	7 1/2	X200-055HFEF2/HFU2	AWG12 / 3.3mm² (60°C only)		20A
7.5	10	X200-075HFEF2/HFU2			25A

Note 1: Field wiring must be made by a UL-Listed and CSA-certified closed-loop terminal connector sized for the wire gauge involved. Connector must be fixed by using the crimping tool specified by the connector manufacturer.
Note 2: Be sure to consider the capacity of the circuit breaker to be used.
Note 3: Be sure to use a larger wire gauge if power line length exceeds 66ft. (20m).
Note 4: Use 18 AWG / 0.75mm² wire for the alarm signal wire ([AL0], [AL1], [AL2] terminals).

Terminal Dimensions and Torque Specs

The terminal screw dimensions for all X200₂ inverters are listed in table below. This information is useful in sizing spade lug or ring lug connectors for wire terminations.

WARNING: Fasten the screws with the specified fastening torque in the table below. Check for any loosening of screws. Otherwise, there is the danger of fire.

Connector	Number of Screw Terminals	Models 002S~004S, 002N~004N		Models 007S~022S, 007N~022N,037L, 004H~040H		Models 055~075L/H	
		Screw Diameter	Width (mm)	Screw Diameter	Width (mm)	Screw Diameter	Width (mm)
Power Terminals (Top side)	5	M3.5	7.1	M4	9.2	M5	13
Power Terminals (Bottom side)	8(dual in row)	M3.5	7.1	–	–	–	–
	7	–	–	M4	9.2	M5	13
Control Signal	15	M2	–	M2	–	M2	–
Alarm Signal	3	M3	–	M3	–	M3	–

When connecting wiring, use the tightening torque listed in the following table to safely attach wiring to the connectors.

Screw	Tightening Torque	Screw	Tightening Torque	Screw	Tightening Torque
M2	0.2N•m (max. 0.25 N•m)	M3.5	0.8N•m (max. 0.9 N•m)	M5	3.0N•m (max. 3.3 N•m)
M3	0.5N•m (max. 0.6 N•m)	M4	1.2N•m (max. 1.3 N•m)	–	–

Wire the Inverter Input to a Supply

6 **Step 6:** In this step, you will connect wiring to the input of the inverter. First, you must determine whether the inverter model you have required three-phase power only, or single-phase power only. All models have the same power connection terminals **[R/L1], [S/L2], and [T/L3]. So you must refer to the specifications label (on the side of the inverter) for the acceptable power source types! For inverters that can accept single-phase power and are connected that way, terminal [S/L2] will remain unconnected.**
The wiring example to the right shows an X200₂ inverter wired for 3-phase input. Note the use of ring lug connectors for a secure connection.

Input wiring for single-phase input (-SFEF2 and –NFU2 models)

Input wiring for 3-phase input (models –NFU2, -LFU2, -HFEF2, -HFU2)

CAUTION: Power terminal assignment is different compared to old models such as L100, L200 series, etc,. Pay attention when wiring the power cable

Please use the terminal arrangement below corresponding to your inverter model.

Inverter models **X200-002SFEF2~004SFEF2, X200-002NFU2~004NFU2**

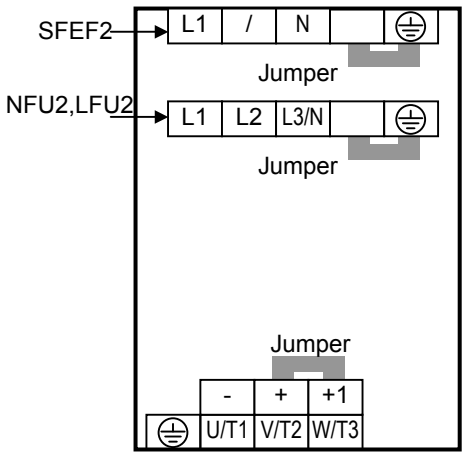

X200-005SFEF2~022SFEF2, X200-007NFU2~022NFU2,037LFU2 X200-004HFEF2~040HFEF2 X200-004HFU2~040HFU2 X200-055LFU2~075LFU2

X200-055HFU2~075HFU2 X200-055HFEF2~075HFEF2

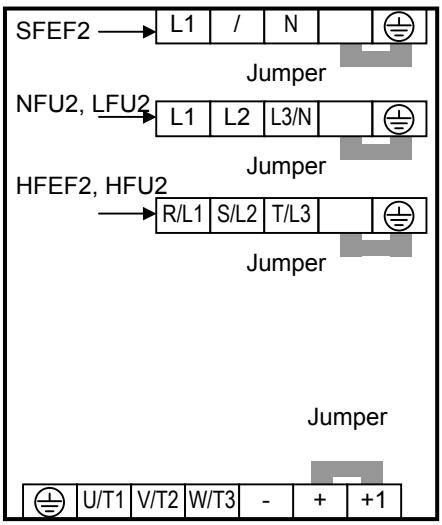

CAUTION: Power terminal assignment is different compared to old models such as L100, L200 series, etc,. Pay attention when wiring the power cable

NOTE: An inverter powered by a portable power generator may receive a distorted power waveform, overheating the generator. In general, the generator capacity should be five times that of the inverter (kVA).

CAUTION: Be sure that the input voltage matches the inverter specifications:

- Single-phase 200 to 240 V 50/60 Hz (0.2kW~2.2kW) for SFEF2 models
- Single/Three-phase 200 to 240 V 50/60 Hz (0.2kW~2.2kW) for NFU2 models
- Three-phase 200 to 240 V 50/60 Hz (3.7kW~7.5kW) for LFU2 models
- Three-phase 380 to 480 V 50/60Hz (0.4kW~7.5kW) for HFEF2 and HFU2 models

CAUTION: Be sure not to power a three-phase-only inverter with single phase power. Otherwise, there is the possibility of damage to the inverter and the danger of fire.

CAUTION: Be sure not to connect an AC power supply to the output terminals. Otherwise, there is the possibility of damage to the inverter and the danger of injury and/or fire.

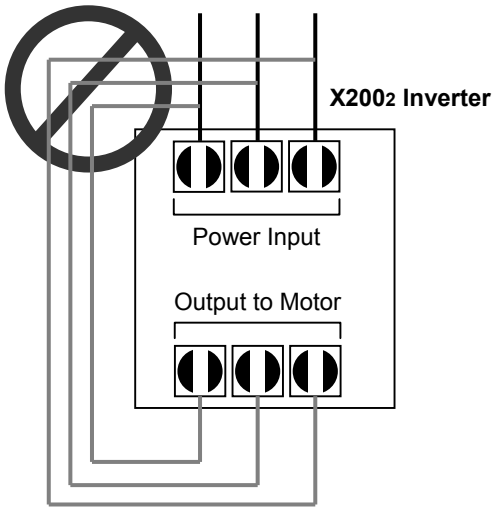

CAUTION: Remarks for using ground fault interrupter breakers in the main power supply: Adjustable frequency inverter with integrated CE-filters and shielded (screened) motor cables have a higher leakage current toward earth GND. Especially at the moment of switching ON this can cause an inadvertent trip of ground fault interrupters. Because of the rectifier on the input side of the inverter there is the possibility to stall the switch-off function through small amounts of DC current.
Please observe the following:

- Use only short time-invariant and pulse current-sensitive ground fault interrupters with higher trigger current.
- Other components should be secured with separate ground fault interrupters.
- Ground fault interrupters in the power input wiring of an inverter are not an absolute protection against electric shock.

CAUTION: Be sure to install a fuse in each phase of the main power supply to the inverter. Otherwise, there is the danger of fire.

CAUTION: For motor leads, ground fault interrupter breakers and electromagnetic contactors, be sure to size these components properly (each must have the capacity for rated current and voltage). Otherwise, there is the danger of fire.

Wire the Inverter Output to Motor

7 **Step 7:** The process of motor selection is beyond the scope of this manual. However, it must be an AC induction motor with three phases. It should also come with a chassis ground lug. If the motor does not have three power input leads, stop the installation and verify the motor type. Other guidelines for wiring the motor include:

- Use an inverter-grade motor for maximum motor life (1600V insulation).
- For standard motors, use the AC reactor accessory if the wiring between the inverter and motor exceeds 10 meters in length.

Simply connect the mot or to the terminals [U/T1], [V/T2], and [W/T3] as shown to the right. This is a good time to connect the chassis ground lug on the drive as well. The motor chassis ground must also connect to the same point. Use a star ground (single-point) arrangement, and never daisy-chain the grounds (point-to-point).

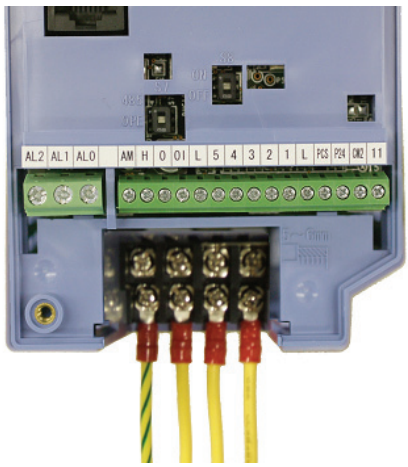

- Check the mechanical integrity of each wire crimp and terminal connection.
- Replace the housing partition that covers access to the power connections.

CAUTION: Power terminal assignment is different compared to old models such as L100, L200 series, etc,. Pay attention when wiring the power cable

Logic Control Wiring

After completing the initial installation and powerup test in this chapter, you may need to wire the logic signal connector for your application. For new inverter users/applications, we highly recommend that you first complete the powerup test in this chapter without adding any logic control wiring. Then you will be ready to set the required parameters for logic control as covered in Chapter 4, Operations and Monitoring.

Uncover the Inverter Vents

8 **Step 8:** After mounting and wiring the inverter, remove any covers from the inverter housing. This includes material over the side ventilation ports.

WARNING: Make sure the input power to the inverter is OFF. If the drive has been powered, leave it OFF for five minutes before continuing.

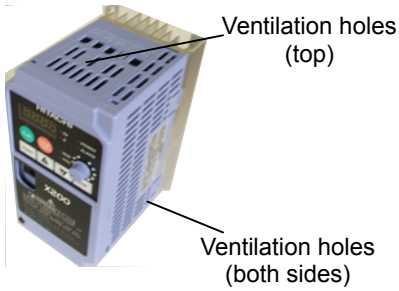

Powerup Test

9 **Step 9:** After wiring the inverter and motor, you're ready to do a powerup test. The procedure that follows is designed for the first-time use of the drive. Please verify the following conditions before conducting the powerup test:

- You have followed all the steps in this chapter up to this step.
- The inverter is new, and is securely mounted to a non-flammable vertical surface.
- The inverter is connected to a power source and a motor.
- No additional wiring of the inverter connectors or terminals has been done.
- The power supply is reliable, and the motor is a known working unit, and the motor nameplate ratings match the inverter ratings.
- The motor is securely mounted, and is not connected to any load.

Goals for the Powerup Test

If there are any exceptions to the above conditions at this step, please take a moment to take any measures necessary to reach this basic starting point. The specific goals of this powerup test are:

1. Verify that the wiring to the power supply and motor is correct.
2. Demonstrate that the inverter and motor are generally compatible.
3. Get an introduction to the use of the built-in operator keypad.

The powerup test gives you an important starting to ensure a safe and successful application of the Hitachi inverter. We highly recommend performing this test before proceeding to the other chapters in this manual.

Pre-test and Operational Precautions

The following instructions apply to the powerup test, or to any time the inverter is powered and operating. Please study the following instructions and messages before proceeding with the powerup test.

1. The power supply must have fusing suitable for the load. Check the fuse size chart presented in Step 5, if necessary.
2. Be sure you have access to a disconnect switch for the drive input power if necessary. However, do not turn OFF power during inverter operation unless it is an emergency.
3. Turn the keypad potentiometer to the minimum position (full counter-clockwise).

CAUTION: The heat sink fins will have a high temperature. Be careful not to touch them. Otherwise, there is the danger of getting burned.

CAUTION: The operation of the inverter can be easily changed from low speed to high speed. Be sure to check the capability and limitations of the motor and machine before operating the inverter. Otherwise, there is the danger of injury.

CAUTION: If you operate a motor at a frequency higher than the inverter standard default setting (50Hz/60Hz), be sure to check the motor and machine specifications with the respective manufacturer. Only operate the motor at elevated frequencies after getting their approval. Otherwise, there is the danger of equipment damage and/or injury.

CAUTION: Check the following before and during the Powerup test. Otherwise, there is the danger of equipment damage.

- Is the shorting bar between the [+1] and [+] terminals installed? DO NOT power or operate the inverter if the jumper is removed.
- Is the direction of the motor rotation correct?
- Did the inverter trip during acceleration or deceleration?
- Were the rpm and frequency meter readings as expected?
- Were there any abnormal motor vibration or noise?

Powering the Inverter

If you have followed all the steps, cautions and warnings up to this point, you're ready to apply power. After doing so, the following events should occur:

- The *POWER* LED will illuminate.
- The numeric (7-segment) LEDs will display a test pattern, then stop at *0.0*.
- The *Hz* LED will be ON.

If the motor starts running unexpectedly or any other problem occurs, press the STOP key. Only if necessary should you remove power to the inverter as a remedy.

NOTE: If the inverter has been previously powered and programmed, the LEDs (other than the POWER LED) may illuminate differently than as indicated above. If necessary, you can initialize all parameters to the factory default settings. See "Restoring Factory Default Settings" on page 6-8.

Using the Front Panel Keypad

Please take a moment to familiarize yourself with the keypad layout shown in the figure below. The display is used in programming the inverter's parameters, as well as monitoring specific parameter values during operation.

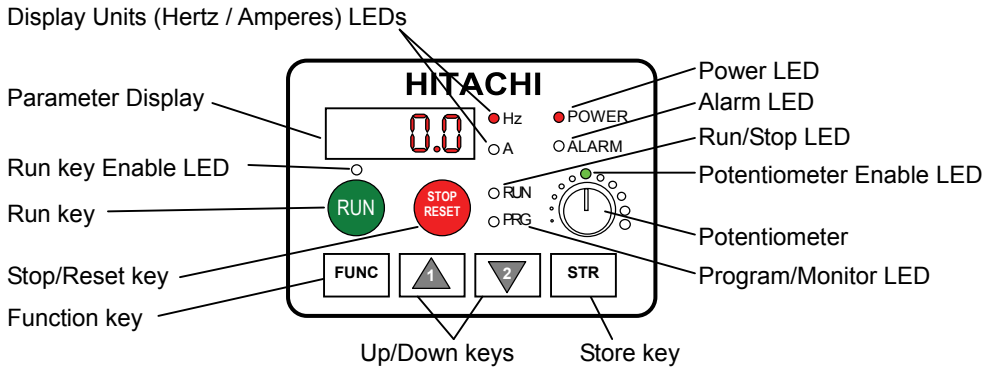

Key and Indicator Legend

- **Run/Stop LED** – ON when the inverter output is ON and the motor is developing torque (Run Mode), and OFF when the inverter output is OFF (Stop Mode).
- **Program/Monitor LED** – This LED is ON when the inverter is ready for parameter editing (Program Mode). It is OFF when the parameter display is monitoring data (Monitor Mode).
- **Run Key Enable LED** – is ON when the inverter is ready to respond to the Run key, OFF when the Run key is disabled.
- **Run Key** – Press this key to run the motor (the Run Enable LED must be ON first). Parameter F004, Keypad Run Key Routing, determines whether the Run key generates a Run FWD or Run REV command.
- **Stop/Reset Key** – Press this key to stop the motor when it is running (uses the programmed deceleration rate). This key will also reset an alarm that has tripped.
- **Potentiometer** – Allows an operator to directly set the motor speed when the potentiometer is enabled for output frequency control.
- **Potentiometer Enable LED** – ON when the potentiometer is enabled for value entry.
- **Parameter Display** – A 4-digit, 7-segment display for parameters and function codes.
- **Display Units, Hertz/Amperes** – One of these LEDs will be ON to indicate the units associated with the parameter display.
- **Power LED** – This is ON when the power input to the inverter is ON.
- **Alarm LED** – ON when an inverter trip is active (alarm relay contact will be closed).
- **Function Key** – This key is used to navigate through the lists of parameters and functions for setting and monitoring parameter values.
- **Up/Down keys** – Use these keys alternatively to move up or down the lists of parameter and functions shown in the display, and increment/decrement values.
- **Store key** – When the unit is in Program Mode and you have edited a parameter value, press the Store key to write the new value to the EEPROM.

Keys, Modes, and Parameters

The purpose of the keypad is to provide a way to change modes and parameters. The term *function* applies to both monitoring modes and parameters. These are all accessible through *function codes* that are primary 4-character codes. The various functions are separated into related groups identifiable by the left-most character, as the table shows.

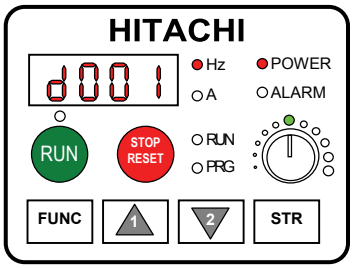

Function Group	Type (Category) of Function	Mode to Access	PRG LED Indicator
"D"	Monitoring functions	Monitor	❍
"F"	Main profile parameters	Program	●
"A"	Standard functions	Program	●
"B"	Fine tuning functions	Program	●
"C"	Intelligent terminal functions	Program	●
"H"	Motor constant functions	Program	●
"P"	DeviceNet functions	Program	●
"E"	Error codes	–	–

For example, function "A004" is the *base frequency setting* for the motor, typically 50Hz or 60Hz. To edit the parameter, the inverter must be in Program Mode (PRG LED will be ON). You use the front panel keys to first select the function code "A004". After displaying the value for "A004", use the Up/Down keys (1 or 2) to edit it.

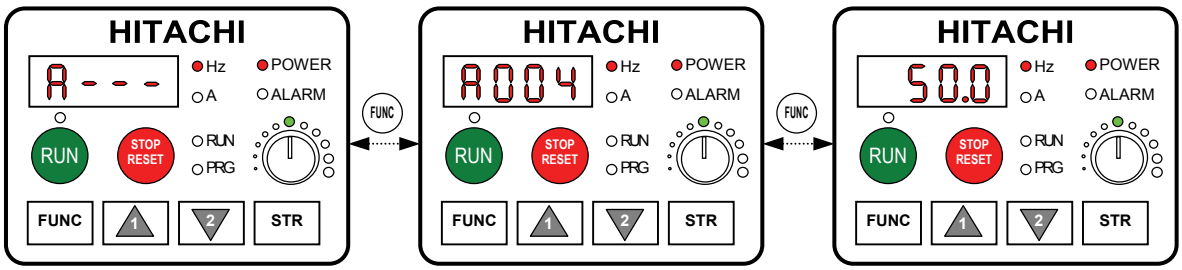

NOTE: The inverter 7-segment display shows lower case "b" and "d", meaning the same as the upper case letters "B" and "D" used in this manual (for uniformity "A" to "F").

The inverter automatically switches into Monitor Mode when you access "D" Group functions. It switches into Program Mode when you access any other group, because they all have editable parameters. Error codes use the "E" Group, and appear automatically when a fault event occurs. "P" group appears when DeviceNet communication is available. Refer to "Monitoring Trip Events, History, & Conditions" on page 6-5 for error code details.

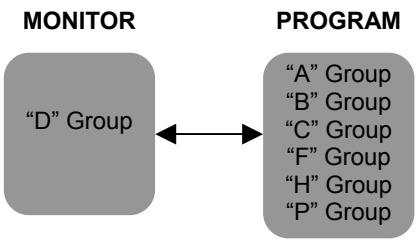

TIP: Pressing FUNC key continuously for 3 seconds makes the display back to d001.

Keypad Navigation Map

The X2002 Series inverter drives have many programmable functions and parameters. Chapter 3 will cover these in detail, but you need to access just a few items to perform the powerup test. The menu structure makes use of function codes and parameter codes to allow programming and monitoring with only a 4-digit display and a keys and LEDs. So, it is important to become familiar with the basic navigation map of parameters and functions in the diagram below. You may later use this map as a reference.

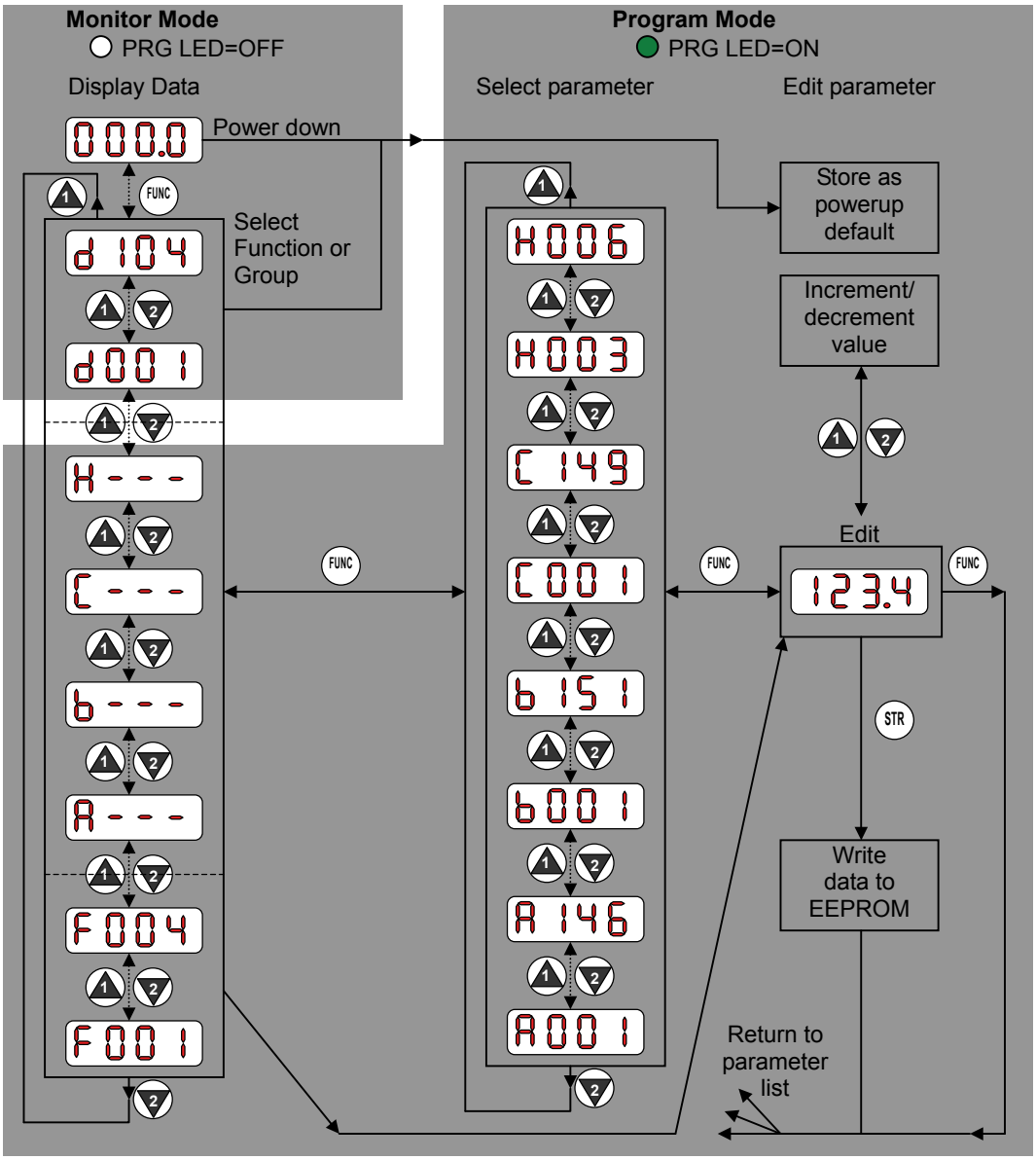

The navigation map shows the relationship of all resources of the inverter in one view. In general, use the (FUNC) key to move left and right, and the (1) (2) (arrow) keys to move up and down.

Selecting Functions and Editing Parameters

To prepare to run the motor in the powerup test, this section will show how to configure the necessary parameters:

1. Select the keypad potentiometer as the source of motor speed command (A001).
2. Select the keypad as the source of the RUN command (A002).
3. Set the inverters maximum output frequency to the motor (A003).
4. Set the motor current for proper thermal protection (B012).
5. Set the inverter's Automatic Voltage Regulation for the motor (A082).
6. Set the number of poles for the motor (H004).

The following series of programming tables are designed for successive use. Each table uses the previous table's final state as the starting point. Therefore, start with the first and continue programming until the last one. If you get lost or concerned that some of the other parameters setting may be incorrect, refer to "Restoring Factory Default Settings" on page 6-8.

Prepare to Edit Parameters – This sequence begins with powering ON the inverter, then it shows how to navigate to the "A" Group parameters for subsequent settings. You can also refer to the "Keypad Navigation Map" on page 2-26 for orientation throughout the steps.

Action	Display	Func./Parameter
Turn ON the inverter.	0.0	Inverter output frequency Displayed (0Hz in Stop Mode)
Press the FUNC key.	d001	"D" Group selected
Press the ▼ key four times.	A- - -	"A" Group selected

Select the Potentiometer for Speed Command – The inverter output frequency can be set from several sources, including an analog input, memory setting, or the network, for example. The powerup test uses the keypad potentiometer as the speed control source for your convenience. In the figure to the right, notice the Potentiometer Enable LED, just above the knob. It the LED is ON, the potentiometer is already selected as the source, and you may skip this step. Note that the default setting depends on the country.

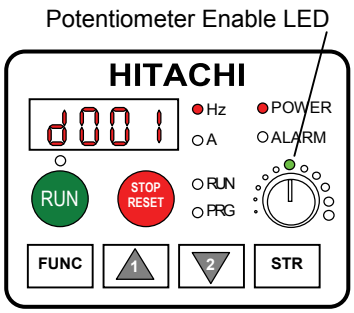

If the Potentiometer Enable LED is OFF, follow these steps below.

Action	Display	Func./Parameter
(Starting point)	A- - -	"A" Group selected
Press the FUNC key.	A001	Speed command source setting
Press the FUNC key again.	01	00 = Keypad potentiometer 01 = Control terminals 02 = Function F001 setting 03 = ModBus network 04 = Calculate function output
Press the ▼2 key.	00	00 = Potentiometer (selected)
Press the STR key.	A001	Store parameter, returns to "A" Group list

Select the Keypad for RUN Command – To RUN command causes the inverter to accelerate the motor to the selected speed. The Run command can arrive from various sources, including the control terminals, the Run key on the keypad or the network. In the figure to the right, notice the Run Key Enable LED, just above the Run key. If the LED is ON, the Run key is already selected as the source, and you may skip this step. Note that the default setting depends on the country.

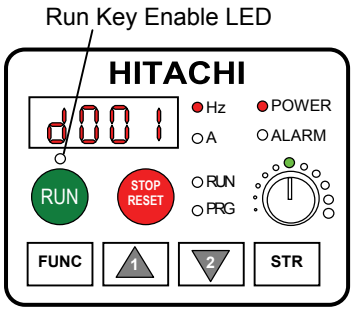

If the Potentiometer Enable LED is OFF, follow these steps below (the table resumes action from the end of the previous table).

Action	Display	Func./Parameter
(Starting point)	A001	Speed command source setting
Press the ▲1 key once.	A002	Run command source setting
Press the FUNC key.	01	01 = Control terminals 02 = Run key on keypad 03 = ModBus network
Press the ▲1 key.	02	02 = Run key on keypad (selected)
Press the STR key.	A002	Store parameter, returns to "A" Group list

NOTE: After completing the steps above, the Run Key Enable LED will be ON. This does not mean the motor is trying to run; it means that the RUN key is now enabled. DO NOT press the RUN key at this time – complete the parameter setup first.

Set the Motor Base Frequency – The motor is designed to operate at a specific AC frequency. Most commercial motors are designed for 50/60 Hz operation. First, check the motor specifications. Then follow the steps below to verify the setting or correct it for your motor. DO NOT set it greater than 50/60 Hz unless the motor manufacturer specifically approves operation at the higher frequency.

Action	Display	Func./Parameter
(Starting point)	A002	Run command source setting
Press the ▲ key once.	A003	Base frequency setting
Press the FUNC key.	60.0 or 50.0	Default value for the base frequency. US = 60 Hz, Europe = 50 Hz
Press the ▲ or ▼ key as needed.	60.0	Set to your motor specs (your display may be different)
Press the STR key.	A003	Store parameter, returns to "A" Group list

CAUTION: If you operate a motor at a frequency higher than the inverter standard default setting (50Hz/60Hz), be sure to check the motor and machine specifications with the respective manufacturer. Only operate the motor at elevated frequencies after getting their approval. Otherwise, there is the danger of equipment damage.

Set the AVR Voltage Setting – The inverter has an Automatic Voltage Regulation (AVR) function. It adjusts the output voltage to match the motor's nameplate voltage rating. The AVR smoothes out fluctuation in the input power source, but note that it does not boost the voltage in the event of a brown-out. Use the AVR setting (A082) that most closely matches the one for your motor.

- 200V class: 200 / 215 / 220 / 230 / 240 VAC
- 400V class: 380 / 400 / 415 / 440 / 460 / 480 VAC

TIP: If you need to scroll through a function or parameter list, press and hold the ▲ or ▼ key to auto-increment through the list.

To set the motor voltage, follow the steps on the following page.

Action	Display	Func./Parameter
(Starting point)	A003	Base frequency setting
Press the ▲ key and hold until →	A082	AVR voltage select
Press the FUNC key.	230 or 400	Default value for AVR voltage: 200V class = 230VAC 400V class = 400VAC (HFE) = 460VAC (HFU)
Press the ▲ or ▼ key as needed.	215	Set to your motor specs (your display may be different)
Press the STR key.	A082	Store parameter, returns to "A" Group list

Set the Motor Current – The inverter has thermal overload protection that is designed to protect the inverter and motor from overheating due to an excessive load. The inverter's uses the motor's current rating to calculate the time-based heating effect. This protection depends on using correct current rating for your motor. The level of electronic thermal setting, parameter B012, is adjustable from 20% to 120% of the inverter's rated current. A proper configuration will also help prevent unnecessary inverter trip events.

Read the motor's current rating on its manufacturer's nameplate. Then follow the steps below to configure the inverter's overload protection setting.

Action	Display	Func./Parameter
(Starting point)	A082	AVR voltage select
Press the FUNC key.	A- - -	"A" Group selected
Press the ▲ key.	b- - -	"B" Group selected
Press the FUNC key.	b001	First "B" Group parameter selected
Press the ▲ key and hold until →	b012	Level of electronic thermal setting
Press the FUNC key.	1.60	Default value will be 100% of inverter rated current
Press the ▲ or ▼ key as needed.	1.80	Set to your motor specs (your display may be different)
Press the STR key.	b012	Store parameter, returns to "B" Group list

Set the Number of Motor Poles – The motor's internal winding arrangement determines its number of magnetic poles. The specification label on the motor usually indicates the number of poles. For proper operation, verify the parameter setting matches the motor poles. Many industrial motors have four poles, corresponding to the default setting in the inverter (H004).

Follow the steps in the table below to verify the motor poles setting and change if necessary (the table resumes action from the end of the previous table.)

Action	Display	Func./Parameter
(Starting point)	b012	Level of electronic thermal setting
Press the FUNC key.	b- - -	"B" Group selected
Press the ▲ key two times.	H- - -	"H" Group selected
Press the FUNC key.	H003	First "H" Group parameter
Press the ▲ key once	H004	Motor poles parameter
Press the FUNC key.	4	2 = 2 poles 4 = 4 poles (default) 6 = 6 poles 8 = 8 poles
Press the ▲ or ▼ key as needed.	4	Set to your motor specs (your display may be different)
Press the STR key.	H004	Store parameter, returns to "H" Group list

This step concludes the parameter setups for the inverter. You are almost ready to run the motor for the first time!

TIP: If you became lost during any of these steps, first observe the state of the PRG LED. Then study the "Keypad Navigation Map on page 2-26 to determine the current state of the keypad controls and display. As long as you do not press the STR key, no parameter will be changed by keypad entry errors. Note that power cycling the inverter causes it to power up Monitor Mode, displaying the value for D001 (output frequency).

The next section will show you how to monitor a particular parameter from the display. Then you will be ready to run the motor.

Monitoring Parameters with the Display

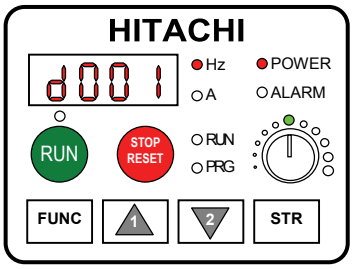

After using the keypad for parameter editing, it's a good idea to switch the inverter from Program Mode to Monitor Mode. The PRG LED will be OFF, and the Hertz or Ampere LED indicates the display units.

For the powerup test, monitor the motor speed indirectly by viewing the inverter's output frequency. The *output frequency* must not be confused with *base frequency* (50/60 Hz) of the motor, or the *carrier frequency* (switching frequency of the inverter, in the kHz range). The monitoring functions are in the "D" list, located near the top left of the "Keypad Navigation Map"on page 2-26.

Output frequency (speed) monitor – Resuming keypad operation from the previous table, follow the steps below. Or instead, you can simply power cycle the inverter, which automatically sets the display to D001 (output frequency value).

Action	Display	Func./Parameter
(Starting point)	H004	Motor poles parameter
Press the FUNC key.	H- - -	"H" Group selected
Press the 1 key.	d001	Output frequency selected
Press the FUNC key.	0.0	Output frequency displayed

When the inverter displays a monitor value, the PRG LED is OFF. This confirms the inverter is not in programming mode, even while you are selecting the particular monitoring parameter. The display shows the current speed (is zero at this point). The Hz LED will be ON, indicating the display units. For current, the Amperes LED will be ON.

Running the Motor

If you have programmed all the parameters up to this point, you're ready to run the motor! First, review this checklist:

1. Verify the power LED is ON. If not, check the power connections.
2. Verify the Potentiometer Enable LED is ON. If it is OFF, check the A001 setting.
3. Verify the Run Key Enable LED is ON. If it is OFF, check the A002 setting.
4. Verify the PRG LED is OFF. If it is ON, review the instructions above.
5. Make sure the motor is disconnected from any mechanical load.
6. Turn the potentiometer to the minimum position (completely counter clock-wise).
7. Now, press the RUN key on the keypad. The RUN LED will turn ON.
8. Slowly increase the potentiometer setting in clockwise fashion. The motor should start turning.
9. Press the STOP key to stop the motor rotation.

Powerup Test Observations and Summary

10 **Step 10:** Reading this section will help you make some useful observations when first running the motor.

Error Codes – If the inverter displays an error code (format is "E xx"), see "Monitoring Trip Events, History, & Conditions" on page 6-5 to interpret and clear the error.

Acceleration and Deceleration – The X200₂ inverter has programmable acceleration and deceleration value. The test procedure left these at the default value, 10 seconds. You can observe this by setting the potentiometer at about half speed before running the motor. Then press RUN, and the motor will take 5 seconds to reach a steady speed. Press the STOP key to see a 5 second deceleration to a STOP.

State of Inverter at Stop – If you adjust the motor's speed to zero, the motor will slow to a near stop, and the inverter turns the outputs OFF. The high-performance X200₂ can rotate at a very slow speed with high torque output, but not zero (must use servo systems with position feedback for that feature). This characteristic means you must use a mechanical brake for some applications.

Interpreting the Display – First, refer to the output frequency display readout. The maximum frequency setting (parameter A044) defaults to 50 Hz or 60 Hz (Europe and United States, respectively) for your application.

Example: Suppose a 4-pole motor is rated for 60 Hz operation, so the inverter is configured to output 60 Hz at full scale. Use the following formula to calculate the rpm.

$$\text{Speed in RPM} = \frac{Frequency \times 60}{Pairs\ \ of\ \ poles} = \frac{Frequency \times 120}{\#of\ \ poles} = \frac{60 \times 120}{4} = 1800 RPM$$

The theoretical speed for the motor is 1800 RPM (speed of torque vector rotation). However, the motor cannot generate torque unless its shaft turns at a slightly different speed. This difference is called *slip*. So it's common to see a rated speed of approximately 1750 RPM on a 60 Hz, 4-pole motor. Using a tachometer to measure shaft speed, you can see the difference between the inverter output frequency and the actual motor speed. The slip increases slightly as the motor's load increases. This is why the inverter output value is called "frequency", since it is not exactly equal to motor speed.

Run/Stop Versus Monitor/Program Modes – The Run LED on the inverter is ON in Run Mode, and OFF in Stop Mode. The Program LED is ON when the inverter is in Program Mode, and OFF for Monitor Mode. All four mode combinations are possible. The diagram to the right depicts the modes and the mode transitions via keypad.

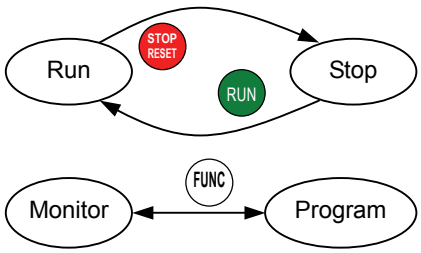

NOTE: Some factory automation devices such as PLCs have alternative Run/Program modes; the device is in either one mode or the other. In the Hitachi inverter, however, Run Mode alternates with Stop Mode, and Program Mode alternates with Monitor Mode. This arrangement lets you program some value while the inverter is operating – providing flexibility for maintenance personnel.

CALL NOW 800-985-6929 http://www.automatedpt.com Email: charles@aut

Configuring Drive Parameters

3

In This Chapter… page

- Choosing a Programming Device 2
- Using the Keypad Devices 3
- “D” Group: Monitoring Functions 6
- “F” Group: Main Profile Parameters 9
- “A” Group: Standard Functions 10
- “B” Group: Fine Tuning Functions 32
- “C” Group: Intelligent Terminal Functions 49
- “H” Group: Motor Constants Functions 65

CALL NOW 800-985-6929 http://www.automatedpt.com Email: charles@automatedpt.com

Choosing a Programming Device

Introduction

Hitachi variable frequency drives (inverters) use the latest electronics technology for getting the right AC waveform to the motor at the right time. The benefits are many, including energy savings and higher machine output or productivity. The flexibility required to handle a broad range of applications has required ever more configurable options and parameters – inverter are now a complex industrial automation component. And this can make a product seem difficult to use, but the goal of this chapter is to make this easier for you.

As the powerup test in Chapter 2 demonstrated, you do not have to program very many parameters to run the motor. In fact, most applications would benefit only from programming just a few, specific parameters. This chapter will explain the purpose of each set of parameters, and help you choose the ones that are important to your application.

If you are developing a new application for the inverter and a motor, finding the right parameters to change is mostly an exercise in optimization. Therefore, it is okay to begin running the motor with a loosely tuned system. By making specific, individual changes and observing their effects, you can achieve a finely tuned system.

Introduction of Inverter Programming

The front panel keypad is the first and best way to get to know the inverter's capabilities. Every function or programmable parameter is accessible from the keypad. The other devices simply imitate the keypad's layout and inverter access, while adding another valuable aspect to the system. For example, the Digital Operator/Copy Unit can transfer one inverter's parameter settings to another inverter, while still providing standard operator keypad control. In this way, you can use a variety of programming devices with basically the same keypad skills. The following table shows various programming options, the features unique to each device, and the cables required.

Device	Part Number	Parameter Access	Parameter setting storage	Cables (choose one)	
				Part number	Length
External inverter keypad	OPE-SRmini	Monitor and Program	EEPROM in inverter	ICS-1	1 meter
				ICS-3	3 meters
Digital Operator/ Copy Unit	SRW-0EX	Monitor and Program	EEPROM in operator panel	ICS-1	1 meter
				ICS-3	3 meters

NOTE: When an external digital operator device such as an OPE-SRmini or SRW-0EX is connected to the inverter, the inverter's keypad is automatically disabled (except for the Stop Key).

Using the Keypad Devices

The X200₂ Series inverter front keypad contains all the elements for both monitoring and programming parameters. The keypad is layout is pictured below. All other programming devices for the inverter have a similar key arrangement and function.

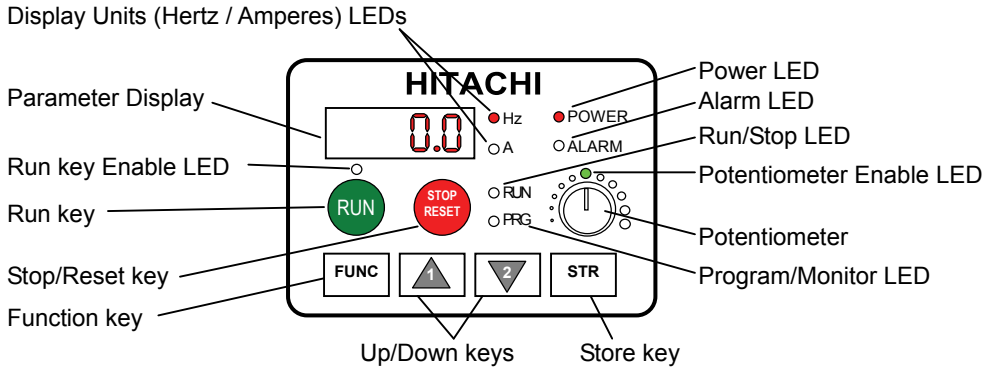

Key and Indicator Legend

- **Run/Stop LED** – ON when the inverter output is ON and the motor is developing torque (Run Mode), and OFF when the inverter output is OFF (Stop Mode).
- **Program/Monitor LED** – This LED is ON when the inverter is ready for parameter editing (Program Mode). It is OFF when the parameter display is monitoring data (Monitor Mode).
- **Run Key Enable LED** – is ON when the inverter is ready to respond to the Run key, OFF when the Run key is disabled.
- **Run Key** – Press this key to run the motor (the Run Enable LED must be ON first). Parameter F004, Keypad Run Key Routing, determines whether the Run key generates a Run FWD or Run REV command.
- **Stop/Reset Key** – Press this key to stop the motor when it is running (uses the programmed deceleration rate). This key will also reset an alarm that has tripped.
- **Potentiometer** – Allows an operator to directly set the motor speed when the potentiometer is enabled for output frequency control.
- **Potentiometer Enable LED** – ON when the potentiometer is enabled for value entry.
- **Parameter Display** – A 4-digit, 7-segment display for parameters and function codes.
- **Display Units, Hertz/Amperes** – One of these LEDs will be ON to indicate the units associated with the parameter display.
- **Power LED** – This is ON when the power input to the inverter is ON.
- **Alarm LED** – ON when an inverter trip is active (alarm relay contact will be closed).
- **Function Key** – This key is used to navigate through the lists of parameters and functions for setting and monitoring parameter values.
- **Up/Down keys** – Use these keys alternatively to move up or down the lists of parameter and functions shown in the display, and increment/decrement values.
- **Store key** – When the unit is in Program Mode and you have edited a parameter value, press the Store key to write the new value to the EEPROM.

Keypad Navigation Map

You can use the inverter's front panel keypad to navigate to any parameter or function. The diagram below shows the basic navigation map to access these items.

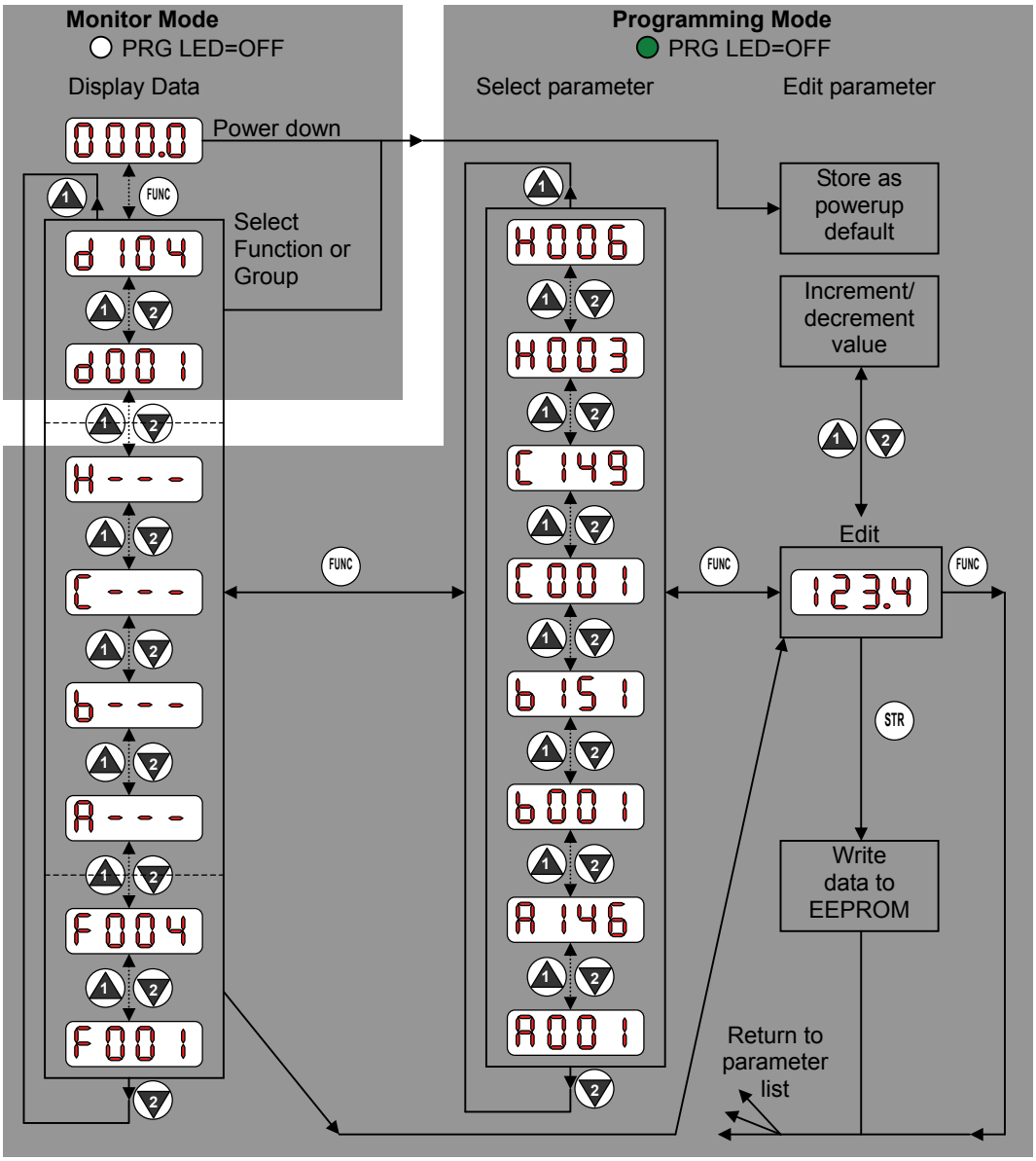

NOTE: The inverter 7-segment display shows lower case "b" and "d", meaning the same as the upper case letters "B" and "D" used in this manual (for uniformity "A" to "F").

NOTE: The Store Key saves the edited parameter (shown in the display) to the inverter's EEPROM. Upload or download of parameters to/from external devices is accomplished through a different command – do not confuse *Store* with *Download* or *Upload*.

Operational Modes

The RUN and PRG LEDs tell just part of the story; Run Mode and Program Modes are independent modes, not opposite modes. In the state diagram to the right, Run alternates with Stop, and Program Mode alternates with Monitor Mode. This is a very important ability, for it shows that a technician can approach a running machine and change some parameters without shutting down the machine.

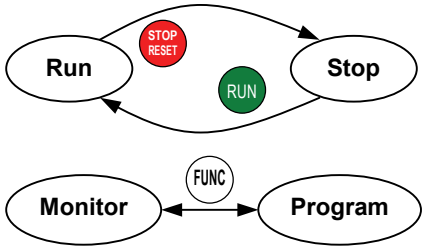

The occurrence of a fault during operation will cause the inverter to enter Trip Mode as shown. An event such as an output overload will cause the inverter to exit the Run Mode and turn OFF its output to the motor. In the Trip Mode, any request to run the motor is ignored. You must clear the error by pressing the Stop/Reset switch. See "Monitoring Trip Events, History, & Conditions" on page 6-5.

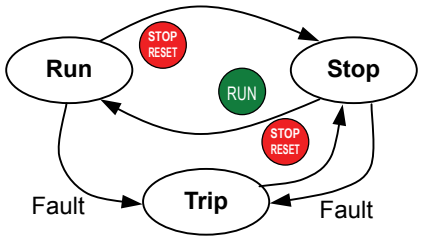

Run Mode Edit

The inverter can be in Run Mode (inverter output is controlling motor) and still allow you to edit certain parameters. This is useful in applications that must run continuously, you need some inverter parameter adjustment.

The parameter tables in this chapter have a column titled "Run Mode Edit". An Ex mark ✕ means the parameter cannot be edited; a Check mark ✓ means the parameter can be edited. The Software Lock Setting (parameter B031) determines when the Run Mode access permission is in effect and access permission in other conditions, as well. It is the responsibility of the user to choose a useful and safe software lock setting for the inverter operating conditions and personnel. Please refer to "Software Lock Mode" on page 3-36 for more information.

	Run Mode Edit	
	✕	
	✓	

Control Algorithms

The motor control program in the X200₂ inverter has two sinusoidal PWM switching algorithms. The intent is that you select the best algorithm for the motor and load characteristics of your application. Both algorithms generate the frequency output in a unique way. Once configured, the algorithm is the basis for other parameter settings as well (see "Torque Control Algorithms" on page 3-16). Therefore, choose the best algorithm early in your application design process.

Inverter Control Algorithms

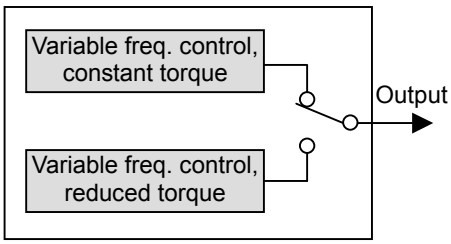

"D" Group: Monitoring Functions

You can access important parameter values with the "D" Group monitoring functions, whether the inverter is in Run Mode or Stop Mode. After selecting the function code number for the parameter you want to monitor, press the Function key once to show the value on the display. In functions D005 and D006, the intelligent terminals use individual segments of the display to show ON/OFF status.

If the inverter display is set to monitor a parameter and powerdown occurs, the inverter stores the present monitor function setting. For your convenience, the display automatically returns to the previously monitored parameter upon the next powerup.

"D" Function			Run Mode Edit	Units
Func. Code	Name / SRW Display	Description		
D001	Output frequency monitor **FM 000.00Hz**	Real time display of output frequency to motor from 0.0 to 400.0Hz	–	Hz
D002	Output current monitor **Iout 0000.0A**	Filtered display of output current to motor (100 ms internal filter time constant), range is 0 to 999.9 ampere	–	A
D003	Rotation direction monitor **Dir STOP**	Three different indications: "F" …Forward "o" …Stop "r" …Reverse	–	–
D004	Process variable (PV), PID feedback monitor **FB 00000.00%**	Displays the scaled PID process variable (feedback) value (A075 is scale factor), 0.00 to 99.99, 100.0 to 999.9 1000. to 9999., 1000 to 999, and 10000 to 99900	–	% times constant
D005	Intelligent input terminal status **IN-TM LHLHL**	Displays the state of the intelligent input terminals: 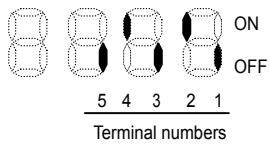	–	–
D006	Intelligent output terminal status **OUT-TM L H**	Displays the state of the intelligent output terminals: 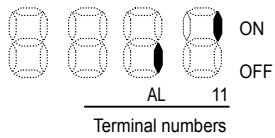	–	–

"D" Function			Run Mode Edit	Units
Func. Code	Name / SRW Display	Description		
D007	Scaled output frequency monitor F-Cnv 00000.00	Displays the output frequency scaled by the constant in B086. Decimal point indicates range: XX.XX 0.00 to 99.99 XXX.X 100.0 to 999.9 XXXX. 1000. to 9999. XXXX 1000 to 9999 (x10=10000 to 99999)	–	Hz times constant
D013	Output voltage monitor Vout 00000V	Voltage of output to motor, Range is 0.0 to 600.0V	–	V
D016	Cumulative operation RUN time monitor RUN 0000000hr	Displays total time the inverter has been in RUN mode in hours. Range is 0 to 9999 / 1000 to 9999 / ⌈100 to ⌈999 (10,000 to 99,900)	–	hours
D017	Cumulative power-on time monitor RUN 0000000hr	Displays total time the inverter has been powered up in hours. Range is 0 to 9999 / 1000 to 9999 / ⌈100 to ⌈999 (10,000 to 99,900)	–	hours
D018	Cooling Fin temperature monitor TH-Fin 0000.0 C	Temperature of the cooling fin. (0.0~200)	–	°C

Trip Event and History Monitoring

The trip event and history monitoring feature lets you cycle through related information using the keypad. See "Monitoring Trip Events, History, & Conditions" on page 6-5 for more details.

"D" Function			Run Mode Edit	Units
Func. Code	Name / SRW Display	Description		
D080	Trip counter ERR CNT 00000	Number of trip events, Range is 0. to 9999	–	events
D081	Trip monitor 1 ERR1 ########	Displays trip event information: • Error code • Output frequency at trip point • Motor current at trip point • DC bus voltage at trip point • Cumulative inverter operation time at trip point • Cumulative power-ON time at trip point	–	
D082	Trip monitor 2 ERR2 ########		–	–
D083	Trip monitor 3 ERR3 ########		–	–
D102	DC bus voltage monitor Vpn 0000.0Vdc	Voltage of inverter internal DC bus, Range is 0.0 to 999.9	–	V
D104	Electronic thermal monitor E-THM 0000.0%	Accumulated value of electronic thermal detection, range is from 0.0 to 100.0	–	%

Local Monitoring During Network Operation

The X2002 inverter's serial port may be connected to a network or to an external digital operator. During those times, the inverter keypad keys will not function (except for the Stop key). However, the inverter's 4-digit display still provides the Monitor Mode function, displaying any of the parameters D001 to D007. Function B089, Monitor Display Select for Networked Inverter, determines the particular D00x parameter displayed. Refer to table below.

B089 Monitor Display Select for Networked Inverter		
Option Code	Monitor Code	Monitor Function Name
01	D001	Output frequency monitor
02	D002	Output current monitor
03	D003	Rotation direction monitor
04	D004	Process variable (PV),PID feedback monitor
05	D005	Intelligent input terminal status
06	D006	Intelligent output terminal status
07	D007	Scaled output frequency monitor

When monitoring the inverter during network operation, please note the following:

- The inverter display will monitor D00x functions according to B089 setting when…
  - The OPE/485 DIP switch is set to the "485" position, or
  - A device is already connected to the inverter's serial port at inverter powerup.
- During network operation, the inverter keypad will also display error codes for inverter trip events. Use the Stop key or inverter Reset function to clear the error. Refer to "Error Codes" on page 6-5 to interpret the error codes.
- The Stop key can be disabled, if you prefer, by using function B087.

"F" Group: Main Profile Parameters

The basic frequency (speed) profile is defined by parameters contained in the "F" Group as shown to the right. The set running frequency is in Hz, but acceleration and deceleration are specified in the time duration of the ramp (from zero to maximum frequency, or from maximum frequency to zero). The motor direction parameter determines whether the keypad Run key produces a FWD or REV command. This parameter does not affect the intelligent terminal [FW] and [REV] functions, which you configure separately.

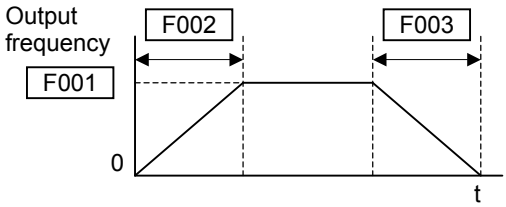

Acceleration 1 and Deceleration 1 are the standard default accel and decel values for the main profile. Accel and decel values for an alternative profile are specified by using parameters Ax92 through Ax93. The motor direction selection (F004) determines the direction of rotation as commanded only from the keypad. This setting applies to any motor profile (1st or 2nd) in use at t particular time.

"D" Function			Run Mode Edit	Defaults		
Func. Code	Name / SRW Display	Description		FEF2 (EU)	-FU2 (USA)	Units
F001	Output frequency setting **VR 0000.0Hz**	Standard default target frequency that determines constant motor speed, range is 0.0 / start frequency to 400 Hz	✓	0.0	0.0	Hz
F002	Acceleration (1) time setting **ACC 1 010.00s**	Standard default acceleration, range is 0.01 to 3000 sec.	✓	10.0	10.0	sec.
F202	Acceleration (1) time setting, 2nd motor **2ACC 1 010.00s**	Standard default acceleration, 2nd motor range is 0.01 to 3000 sec.	✓	10.0	10.0	sec.
F003	Deceleration (1) time setting **DEC 1 010.00s**	Standard default deceleration, range is 0.01 to 3000 sec.	✓	10.0	10.0	sec.
F203	Deceleration (1) time setting, 2nd motor **2DEC 1 010.00s**	Standard default deceleration, 2nd motor range is 0.01 to 3000 sec.	✓	10.0	10.0	sec.
F004	Cumulative power-on time monitor **DIG-RUN FWD**	Two options; select codes: 00 …Forward 01 …Reverse	✗	00	00	–

"A" Group: Standard Functions

The inverter provides flexibility in how you control Run/Stop operation and set the output frequency (motor speed). It has other control sources that can override the A001 / A002 settings. Parameter A001 sets the source selection for the inverter's output frequency. Parameter A002 selects the Run command source (for FW or RV Run commands). The default settings use the input terminals for –FE (European) models, and the keypad for –FU (USA) models.

"A" Function			Run Mode Edit	Defaults		
Func. Code	Name / SRW Display	Description		-FE2 (EU)	-FU2 (USA)	Units
A001	Frequency source setting **F-COM** VR	Five options; select codes: 00 …Keypad potentiometer 01 …Control terminal 02 …Function F001 setting 03 …ModBus network input 10 …Calculate function output	✕	01	00	–
A201	Frequency source setting, 2nd motor **2F-COM** VR		✕	01	00	–
A002	Run command source setting **OPE-Mode** REM	Three options; select codes: 01 …Control terminal 02 …Run key on keypad, or digital operator 03 … ModBus network input	✕	01	02	–
A202	Run command source setting, 2nd motor **OPE-Mode** REM		✕	01	02	–

Frequency Source Setting – For parameter A001, the following table provides a further description of each option, and a reference to other page(s) for more information.

Code	Frequency Source	Refer to page(s)…
00	Keypad potentiometer – The range of rotation of the knob matches the range defined by B082 (Start frequency adjustment) to A004 (Maximum frequency setting)	2-24
01	Control terminal – The active analog input signal on analog terminals [O] or [OI] sets the output frequency	4-53, 3-13, 3-28, 3-49
02	Function F001 setting – The value in F001 is a constant, used for the output frequency	3-9
03	ModBus network input – The network has a dedicated register for inverter output frequency	B-19
10	Calculate function output – The Calculated function has user-selectable analog input sources (A and B). The output can be the sum, difference, or product (+, -, x) of the two outputs.	3-29

Run Command Source Setting – For parameter A002, the following table provides a further description of each option, and a reference to other page(s) for more information.

Code	Run Command Source	Refer to page(s)…
01	Control terminal – The [FW] or [RV] input terminals control Run/Stop operation	4-11
02	Keypad Run key – The Run and Stop keys provide control	2-24
03	ModBus network input – The network has a dedicated coil for Run/Stop command and a coil for FW/RV	B-19

A001/A002 Override Sources – The inverter allows some sources to override the setting for output frequency and Run command in A001 and A002. This provides flexibility for applications that occasionally need to use a different source, leaving the standard settings in A001/A002.

The inverter has other control sources that can temporarily override the parameter A001 setting, forcing a different output frequency source. The following table lists all frequency source setting methods and their relative priority ("1" is the highest priority).

Priority	A001 Frequency Source Setting Method	Refer to page…
1	[CF1] to [CF4] Multi-speed terminals	4-12
2	[OPE] Operator Control intelligent input	4-29
3	[F-TM] intelligent input	4-31
4	[AT] terminal	4-22
5	A001 Frequency source setting	3-10

The inverter also has other control sources that can temporarily override the parameter A002 setting, forcing a different Run command source. The following table lists all Run command setting methods and their relative priority ("1" is the highest priority).

Priority	A002 Run Command Setting Method	Refer to page…
1	[OPE] Operator Control intelligent input	4-29
2	[F-TM] intelligent input	4-31
3	A002 Run command source setting	3-10

Basic Parameter Settings

These settings affect the most fundamental behavior of the inverter – the outputs to the motor. The frequency of the inverter's AC output determines the motor speed. You may select from three different sources for the reference speed. During application development you may prefer using the potentiometer, but you may switch to an external source (control terminal setting) in the finished application, for example.

The base frequency and maximum frequency settings interact according to the graph below (left). The inverter output operation follows the constant V/f curve until it reaches the full-scale output voltage at the base frequency. This initial straight line is the constant-torque part of the operating characteristic. The horizontal line over to the maximum frequency serves to let the motor run faster, but at a reduced torque. This is the constant-power operating range. If you want the motor to output constant torque over its entire operating range (limited to the motor nameplate voltage and frequency rating), then set the base frequency and maximum frequency equal as shown (below right).

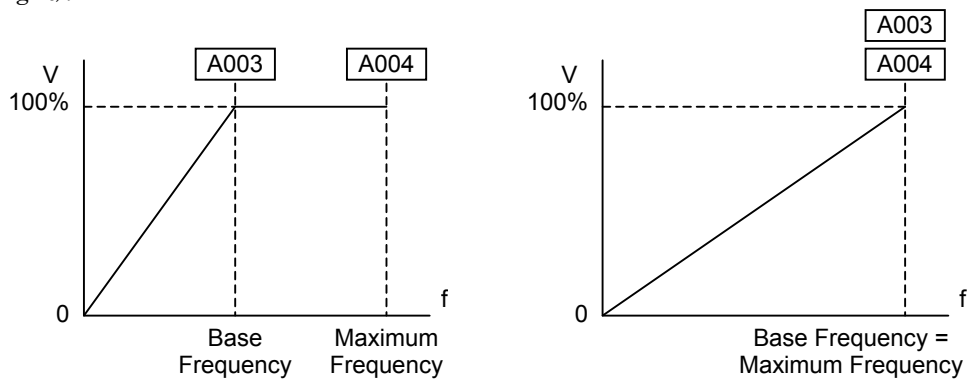

NOTE: The "2nd motor" settings in the table in this chapter store an alternate set of parameters for a second motor. The inverter can use the 1st set or 2nd set of parameters to generate the output frequency to the motor. See "Configuring the Inverter for Multiple Motors" on page 4-58.

"A" Function			Run Mode Edit	Defaults		
Func. Code	Name / SRW Display	Description		-FE2 (EU)	-FU2 (USA)	Units
A003	Base frequency setting **F-BASE 00060Hz**	Settable from 30 Hz to the maximum frequency(A004)	✗	50.0	60.0	Hz
A203	Base frequency setting, 2nd motor **2F-BASE 00060Hz**	Settable from 30 Hz to the 2nd maximum frequency(A204)	✗	50.0	60.0	Hz
A004	Maximum frequency setting **F-MAX 00060Hz**	Settable from the base frequency to 400 Hz	✗	50.0	60.0	Hz
A204	Maximum frequency setting, 2nd motor **2F-MAX 00060Hz**	Settable from the 2nd base frequency to 400 Hz	✗	50.0	60.0	Hz

Analog Input Settings

The inverter has the capability to accept an external analog input that can command the output frequency to the motor. Voltage input (0-10 V) and current input (4-20mA) are available on separate terminals ([O] and [OI] respectively). Terminal [L] serves as signal ground for the two analog inputs. The analog input settings adjust the curve characteristics between the analog input and the frequency output.

Please note that you cannot use the [O] and [OI] input at the same time.

Adjusting [O-L] characteristics – In the graph to the right, A013 and A014 select the active portion of the input voltage range. Parameters A011 and A012 select the start and end frequency of the converted output frequency range, respectively. Together, these four parameters define the major line segment as shown. When the line does not begin at the origin (A011 and A013 > 0), then A015 defines whether the inverter outputs 0Hz or the A011-specified frequency when the analog input value is less than the A013 setting. When the input voltage is greater than the A014 ending value, the inverter outputs the ending frequency specified by A012.

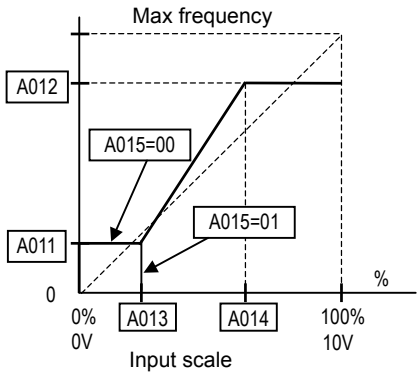

Adjusting [OI-L] characteristics – In the graph to the right, A103 and A104 select the active portion of the input current range. Parameters A101 and A102 select the start and end frequency of the converted output frequency range, respectively. Together, these four parameters define the major line segment as shown. When the line does not begin at the origin (A101 and A103 > 0), then A105 defines whether the inverter outputs 0Hz or the A101-specified frequency when the analog input value is less than the A103 setting. When the input voltage is greater than the A104 ending value, the inverter outputs the ending frequency specified by A102.

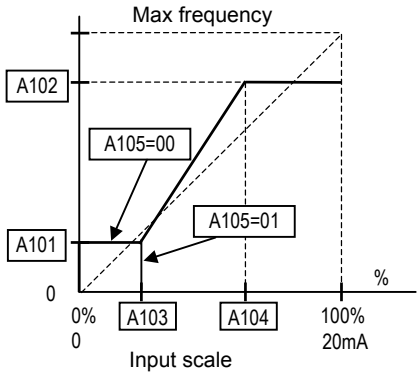

Adjusting keypad potentiometer characteristics – Refer to parameters A151~A155.

"A" Function			Run Mode Edit	Defaults		
Func. Code	Name / SRW Display	Description		-FE2 (EU)	-FU2 (USA)	Units
A005	[AT] selection **AT-Slct O/VR**	Five options; select codes: 02...Select between [O] and keypad potentiometer at [AT] 03...Select between [OI] and integrated POT at [AT] 04...Only [O] input active 05...Only [OI] input active	✗	02	02	–
A011	O-L input active range start frequency **O-EXS 0000.0Hz**	The output frequency corresponding to the analog input range starting point, range is 0.0 to 400.0	✗	0.0	0.0	Hz
A012	O-L input active range end frequency **O-EXE 0000.0Hz**	The output frequency corresponding to the analog input range ending point, range is 0.0 to 400.0	✗	0.0	0.0	Hz
A013	O-L input active range start voltage **O-EX%S 00000%**	The starting point (offset) for the active analog input range, range is 0. to 100.	✗	0.	0.	%
A014	O-L input active range end voltage **O-EX%E 00000%**	The ending point (offset) for the active analog input range, range is 0. to 100.	✗	100.	100.	%
A015	O-L input start frequency enable **O-LVL 0Hz**	Two options; select codes: 00…Use offset (A011 value) 01…Use 0Hz	✗	01	01	–
A016	External frequency filter time constant **F-SAMP 00008**	Range n = 1 to 17, where n = number of samples for avg.	✗	8.	8.	Sam-ples

A016: External Frequency Filter Time Constant – This filter smoothes the analog input signal for the inverter's output frequency reference. A016 set the filter range from n=1 to 16. This is a simple moving average calculation, where n (number of samples used) can be selected.

Multi-speed and Jog Frequency Setting

The X2002 inverter has the capability to store and output up to 16 preset frequencies to the motor (A020 to A035). As in traditional motion terminology, we call this *multi-speed profile* capability. These preset frequencies are selected by means of digital inputs to the inverter. The inverter applies the current acceleration or deceleration setting to change from the current output frequency to the new one. The first multi-speed setting is duplicated for the second motor settings (the remaining 15 multi-speeds apply only to the first motor).

The jog speed setting is used whenever the Jog command is active. The jog speed setting range is arbitrarily limited to 10 Hz, to provide safety during manual operation. The acceleration to the jog frequency is instantaneous, but you can choose from three modes for the best method for stopping the jog operation.

"A" Function			Run Mode Edit	Defaults		
Func. Code	Name / SRW Display	Description		-FE2 (EU)	-FU2 (USA)	Units
A020	Multi-speed frequency setting **SPD 00s 0000.0Hz**	Defines the first speed of a multi-speed profile, range is 0.0 / start frequency to 400Hz A020 = Speed 0 (1st motor)	✓	0.0	0.0	Hz
A220	Multi-speed frequency setting, 2nd motor **2SPD00s 0000.0Hz**	Defines the first speed of a multi-speed profile or a 2nd motor, range is 0.0 / start frequency to 400Hz A220 = Speed 0 (2nd motor)	✓	0.0	0.0	Hz
A021 to A035	Multi-speed frequency settings (for both motors)	Defines 15 more speeds, range is 0.0 / start frequency to 400 Hz. A021=Speed 1 ~ A035=Speed15	✓	See next row	See next row	Hz
	SPD 01s 000.0Hz	A021		0.0	0.0	
	SPD 02s 000.0Hz	A022		0.0	0.0	
	SPD 03s 000.0Hz	A023		0.0	0.0	
	SPD 04s 000.0Hz	A024		0.0	0.0	
	SPD 05s 000.0Hz	A025		0.0	0.0	
	SPD 06s 000.0Hz	A026		0.0	0.0	
	SPD 07s 000.0Hz	A027		0.0	0.0	
	SPD 08s 000.0Hz	A028		0.0	0.0	
	SPD 09s 000.0Hz	A029		0.0	0.0	
	SPD 10s 000.0Hz	A030		0.0	0.0	
	SPD 11s 000.0Hz	A031		0.0	0.0	
	SPD 12s 000.0Hz	A032		0.0	0.0	
	SPD 13s 000.0Hz	A033		0.0	0.0	
	SPD 14s 000.0Hz	A034		0.0	0.0	
	SPD 15s 000.0Hz	A035		0.0	0.0	
A038	Jog frequency setting **Jog-F 001.00Hz**	Defines limited speed for jog, range is 0.00 / start frequency to 9.99 Hz	✓	1.00	1.00	Hz
A039	Jog stop mode **Jog-Mode FRS**	Define how end of jog stops the motor; three options: 00…Free-run stop 01…Controlled deceleration 02…DC braking to stop	✗	00	00	–

Torque Control Algorithms

Inverter Torque Control Algorithms

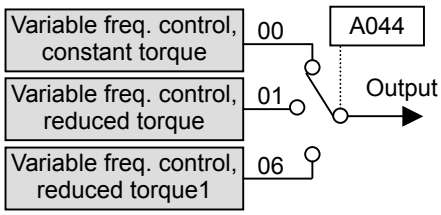

The inverter generates the motor output according to the V/f algorithm selected. Parameter A044 selects the inverter algorithm for generating the frequency output, as shown in the diagram to the right (A244 for 2nd motor). The factory default is 00 (constant torque).

Review the following description to help you choose the best torque control algorithm for your application.

The built-in V/f curves are oriented toward developing constant torque or variable torque characteristics (see graphs below). You can select either constant torque or reduced torque V/f control.

Constant and Variable (Reduced) Torque – The graph at right shows the constant torque characteristic from 0Hz to the base frequency A003. The voltage remains constant for output frequencies higher than the base frequency. The graph below (left) shows the general variable (reduced) torque curve. The range from 0Hz to the base frequency is the variable characteristic.

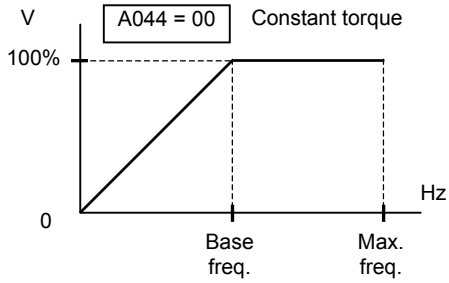

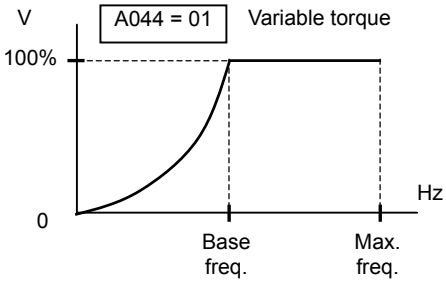

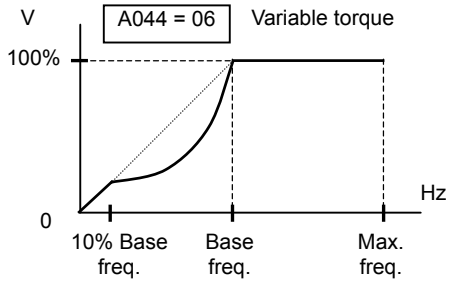

The graph above (right) shows the variable (reduced) torque curve, which has a constant torque characteristic from 0Hz to 10% of the base frequency. This helps to achieve higher torque at low speed with reduced torque curve at higher speeds.

Manual Torque Boost – The Constant and Variable Torque algorithms feature an adjustable *torque boost* curve. When the motor load has a lot of inertia or starting friction, you may need to increase the low frequency starting torque characteristics by boosting the voltage above the normal V/f ratio (shown at right). The function attempts to compensate for voltage drop in the motor primary winding in the low speed range.

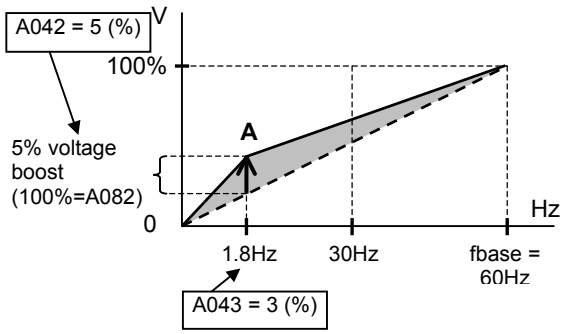

The boost is applied from zero to the base frequency. You set the breakpoint of the boost (point **A** on the graph) by using parameters A042 and A043. The manual boost is calculated as an addition to the standard V/f curve.

Be aware that running the motor at a low speed for a long time can cause motor overheating. This is particularly true when manual torque boost is ON, or if the motor relies on a built-in fan for cooling.

Voltage gain – Using parameter A045 you can modify the voltage gain of the inverter (see graph at right). This is specified as a percentage of the full scale output voltage. The gain can be set from 20% to 100%. It should be adjusted in accordance with the motor specifications.

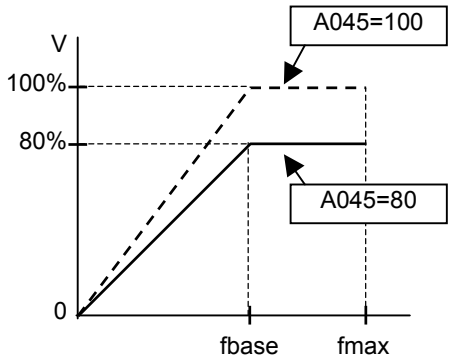

The following table shows the methods of torque control selection.

"A" Function			Run Mode Edit	Defaults		
Func. Code	Name / SRW Display	Description		-FE2 (EU)	-FU2 (USA)	Units
A041	Torque boost select **V-Bst Slct MN**	Two options: 00…Manual torque boost 01…Automatic torque boost	✗	00	00	%
A241	Torque boost select, 2nd motor **2VBst Slct MN**		✗	00	00	%
A042	Manual torque boost value **V-Bst V 0005.0%**	Can boost starting torque between 0 and 20% above normal V/f curve, range is 0.0 to 20.0%	✓	1.8	1.8	%
A242	Manual torque boost value, 2nd motor **2VBst V 0005.0%**		✓	0.0	0.0	%
A043	Manual torque boost frequency adjustment **M-Bst F 0003.0%**	Sets the frequency of the V/f breakpoint A in graph (top of previous page) for torque boost, range is 0.0 to 50.0%	✓	10.0	10.0	%
A243	Manual torque boost frequency adjustment, 2nd motor **2MBst F 0000.0%**		✓	0.0	0.0	%
A044	V/f characteristic curve **CTRL C-TRQ**	Two available V/f curves; 00…Constant torque 01…Reduced torque 06…Reduced torque1	✗	00	00	–
A244	V/f characteristic curve, 2nd motor **2CTRL C-TRQ**		✗	00	00	–
A045	V/f gain setting **V-Gain 00100%**	Sets voltage gain of the inverter, range is 20. to 100.%	✓	100.	100.	%
A245	V/f gain setting, 2nd motor **2V-Gain 00100%**		✓	100.	100.	%

DC Braking (DB) Settings

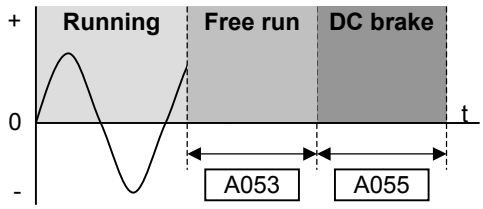

Normal DC braking performance— The DC braking feature can provide additional stopping torque when compared to a normal deceleration to a stop. DC braking is particularly useful at low speeds when normal deceleration torque is minimal.

When you set A051 to 01 (Enable during stop), and the RUN command (FW/RV signal) turns OFF, the inverter injects a DC voltage into the motor windings during deceleration below a frequency you can specify (A052).

The braking power (A054) and duration (A055) can both be set. You can optionally specify a wait time before DC braking (A053), during which the motor will free run.

DC Braking – Frequency Detection — You can instead set DC braking to operate during RUN mode only, by setting A051 to 02 (Frequency detection). In this case DC braking operates when the output frequency comes down to the one you specified in A052 while the RUN command is still active. Refer to the graphs figures below.

External DB and Internal DC braking are invalid during the frequency detection mode.

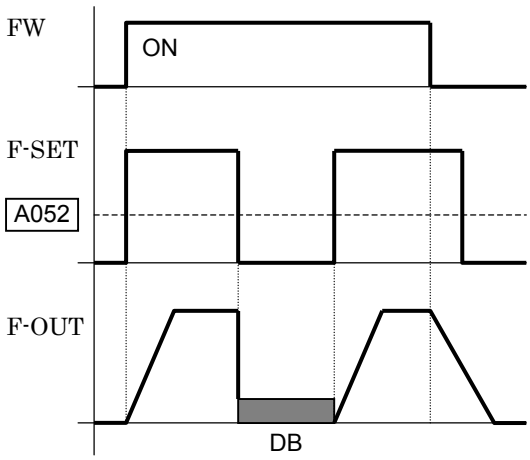

Ex.1) Step change in F-SET.

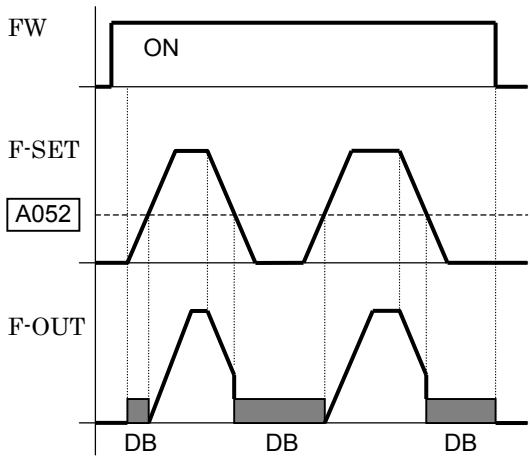

Ex.2) Analog change in F-SET.

Example 1, (above left) shows the performance with A051=02 with a step-changing frequency reference. In this case, when the reference goes to 0, the inverter immediately starts DC braking because the set point drops below the value specified in A052. DC braking continues until the set point exceeds A052. There will be no DC braking at next downward transition because the FW input is OFF.

Example 2, (above right) shows a gradually changing frequency reference, for example by analog input. In this case, there will be a DC braking period at starting because the frequency set point is lower than the value specified in A052.

CAUTION: Be careful to avoid specifying a braking time that is long enough to cause motor overheating. If you use DC braking, we recommend using a motor with a built-in thermistor, and wiring it to the inverter's thermistor input (see "Thermistor Thermal Protection" on page 4-24). Also refer to the motor manufacturer's specifications for duty-cycle recommendations during DC braking.

"A" Function			Run Mode Edit	Defaults		
Func. Code	Name / SRW Display	Description		-FE2 (EU)	-FU2 (USA)	Units
A051	DC braking enable **DCB Mode OFF**	Two options; select codes: 00…Disable 01…Enable during stop 02…Frequency detection	✗	00	00	–
A052	DC braking frequency setting **DCB F 0000.5Hz**	The frequency at which DC braking begins, range is from the start frequency (B082) to 60Hz	✗	0.5	0.5	Hz
A053	DC braking wait time **DCB Wait 0000.0s**	The delay from the end of controlled deceleration to start of DC braking (motor free runs until DC braking begins), range is 0.0 to 5.0 sec.	✗	0.0	0.0	sec.
A054	DC braking force for deceleration **DCB V 00000%**	Level of DC braking force, settable from 0 to 100%	✗	0.	0.	%
A055	DC braking time for deceleration **DCB T 0000.0s**	Sets the duration for DC braking, range is from 0.0 to 60.0 seconds	✗	0.0	0.0	sec.
A056	DC braking / edge or level detection for [DB] input **DCB KIND LEVEL**	Two options; select codes: 00…Edge detection 01…Level detection	✗	01	01	–

Frequency-related Functions

Frequency Limits – Upper and lower limits can be imposed on the inverter output frequency. These limits will apply regardless of the source of the speed reference. You can configure the lower frequency limit to be greater than zero as shown in the graph. The upper limit must not exceed the rating of the motor or capability of the machinery. The maximum frequency setting (A004/A204) takes precedence over frequency upper limit (A061/A261).

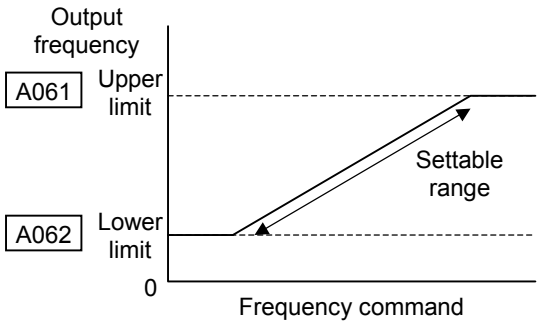

"A" Function			Run Mode Edit	Defaults		
Func. Code	Name / SRW Display	Description		-FE2 (EU)	-FU2 (USA)	Units
A061	Frequency upper limit setting **Lim H 0000.0Hz**	Sets a limit on output frequency less than the maximum frequency (A004). Range is from frequency lower limit (A062) to maximum frequency (A004). 0.0 setting is disabled >0.0 setting is enabled	✕	0.0	0.0	Hz
A261	Frequency upper limit setting, 2nd motor **2Lim H 0000.0Hz**	Sets a limit on output frequency less than the maximum frequency (A204). Range is from frequency lower limit (A262) to maximum frequency (A204). 0.0 setting is disabled >0.0 setting is enabled	✕	0.0	0.0	Hz
A062	Frequency lower limit setting **Lim L 0000.0Hz**	Sets a limit on output frequency greater than zero. Range is start frequency (B082) to frequency upper limit (A061) 0.0 setting is disabled >0.0 setting is enabled	✕	0.0	0.0	Hz
A262	Frequency lower limit setting, 2nd motor **2Lim L 0000.0Hz**	Sets a limit on output frequency greater than zero. Range is start frequency (B082) to frequency upper limit (A261) 0.0 setting is disabled >0.0 setting is enabled	✕	0.0	0.0	Hz

Jump Frequencies – Some motors or machines exhibit resonances at particular speed(s), which can be destructive for prolonged running at those speeds. The inverter has up to three *jump frequencies* as shown in the graph. The hysteresis around the jump frequencies causes the inverter output to skip around the sensitive frequency values.

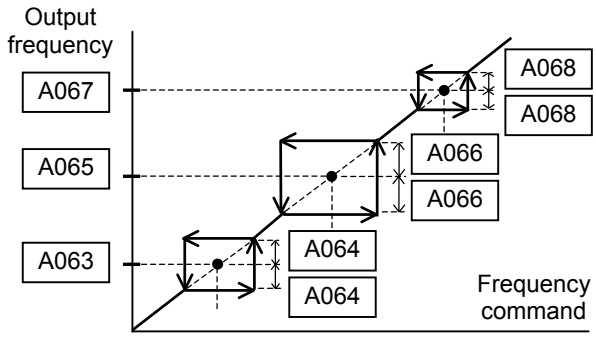

"A" Function			Run Mode Edit	Defaults		
Func. Code	Name / SRW Display	Description		-FE2 (EU)	-FU2 (USA)	Units
A063, A065, A067	Jump (center) frequency setting JUMP F1 0000.0Hz JUMP F2 0000.0Hz JUMP F3 0000.0Hz	Up to 3 output frequencies can be defined for the output to jump past to avoid motor resonances (center frequency) Range is 0.0 to 400.0 Hz	✕	0.0 0.0 0.0	0.0 0.0 0.0	Hz
A064, A066, A068	Jump (hysteresis) frequency width setting JUMP W1 0000.5Hz JUMP W2 0000.5Hz JUMP W3 0000.5Hz	Defines the distance from the center frequency at which the jump around occurs Range is 0.0 to 10.0 Hz	✕	0.5 0.5 0.5	0.5 0.5 0.5	Hz

PID Control

When enabled, the built-in PID loop calculates an ideal inverter output value to cause a loop feedback process variable (PV) to move closer in value to the set point (SP). The frequency command serves as the SP. The PID loop algorithm will read the analog input for the process variable (you specify the current or voltage input) and calculate the output.

- A scaled factor in A075 lets you multiply the PV factor, converting it into engineering units for the process.
- Proportional, integral, and derivative gains are all adjustable.
- See "PID Loop Operation" on page 4-56 for more information.

"A" Function			Run Mode Edit	Defaults		
Func. Code	Name / SRW Display	Description		-FE2 (EU)	-FU2 (USA)	Units
A071	PID enable **PID Mode OFF**	Enables PID function, two option codes: 00…PID Disable 01…PID Enable	✗	00	00	–
A072	PID proportional gain **PID P 0001.0**	Proportional gain has a range of 0.2 to 5.0	✓	1.0	1.0	–
A073	PID integral time constant **PID I 0001.0s**	Integral time constant has a range of 0.0 to 150 seconds	✓	1.0	1.0	sec
A074	PID derivative time constant **PID D 000.00s**	Derivative time constant has a range of 0.0 to 100 seconds	✓	0.00	0.00	sec
A075	PV scale conversion **PID Cnv 001.00%**	Process Variable (PV), scale factor (multiplier), range of 0.01 to 99.99	✗	1.00	1.00	–
A076	PV source setting **PID INP OI**	Selects source of Process Variable (PV), option codes: 00…[OI] terminal (current in) 01…[O] terminal (voltage in) 02…ModBus network 10…Calculate function output	✗	00	00	–
A077	Reverse PID action **PID MINUS OFF**	Two option codes: 00…PID input = SP-PV 01…PID input = -(SP-PV)	✗	00	00	–
A078	PID output limit **PID Vari 0000.0%**	Sets the limit of PID output as percent of full scale, range is 0.0 to 100.0%	✗	0.0	0.0	%

NOTE: The setting A073 for the integrator is the integrator's time constant Ti, not the gain. The integrator gain Ki = 1/Ti. When you set A073 = 0, the integrator is disabled.

Automatic Voltage Regulation (AVR) Function

The automatic voltage regulation (AVR) feature keeps the inverter output waveform at a relatively constant amplitude during power input fluctuations. This can be useful if the installation is subject to input voltage fluctuations. However, the inverter cannot boost its motor output to a voltage higher than the power input voltage. If you enable this feature, be sure to select the proper voltage class setting for your motor.

"A" Function			Run Mode Edit	Defaults		
Func. Code	Name / SRW Display	Description		-FE2 (EU)	-FU2 (USA)	Units
A081	AVR function select **AVR Mode ON**	Automatic (output) voltage regulation, selects from three type of AVR functions, three option codes: 00…AVR enabled 01…AVR disabled 02…AVR enabled except during deceleration	✕	00	00	–
A082	AVR voltage select **AVR AC 00230V**	200V class inverter settings: ……200/215/220/230/240 400V class inverter settings: ……380/400/415/440/460/480	✕	230/ 400	230/ 460	V

Energy Savings Mode / Optional Accel/Decel

Energy Saving Mode – This function allows the inverter to deliver the minimum power necessary to maintain speed at any given frequency. This works best when driving variable torque characteristic loads such as fans and pumps. Parameter A085=01 enables this function and A086 controls the degrees of its effect. A setting of 0.0 yields slow response but high accuracy, while a setting of 100 will yield a fast response with lower accuracy.

"A" Function			Run Mode Edit	Defaults		
Func. Code	Name / SRW Display	Description		-FE2 (EU)	-FU2 (USA)	Units
A085	Operation mode selection **RUN MODE NOR**	Three option codes: 00…Normal operation 01…Energy-saver operation	✕	00	00	–
A086	Energy saving mode tuning **ECO Adj 0050.0%**	Range is 0.0 to 100 %.	✕	50.0	50.0	%

The acceleration time is controlled so that the output current below the level set by the Overload Restriction Function if enabled (Parameters b021, b022, and b023). If Overload Restriction is not enabled, then the current limit used is 150% of the inverter's rated output current.

The deceleration time is controlled so that the output current is maintained below 150% of the inverter's rated current, *and* the DC bus voltage is maintained below the OV Trip level (400V or 800V).

NOTE: If the load exceeds the rating of the inverter, the acceleration time may be increased.

NOTE: If using a motor with a capacity that is one size smaller than the inverter rating, enable the Overload Restriction function (b021) and set the Overload Restriction Level (b022) to 1.5 times the motor nameplate current.

NOTE: Be aware that the acceleration and deceleration times will vary, depending on the actual load conditions during each individual operation of the inverter.

Second Acceleration and Deceleration Functions

The X2002 inverter features two-stage acceleration and deceleration ramps. This gives flexibility in the profile shape. You can specify the frequency transition point, the point at which the standard acceleration (F002) or deceleration (F003) changes to the second acceleration (A092) or deceleration (A093). Or, you can use intelligent input [2CH] to trigger this transition. These profile options are also available for the second motor settings. Select a transition method via A094 as depicted below. Be careful not to confuse the *second acceleration/deceleration settings* with settings for the *second motor*!

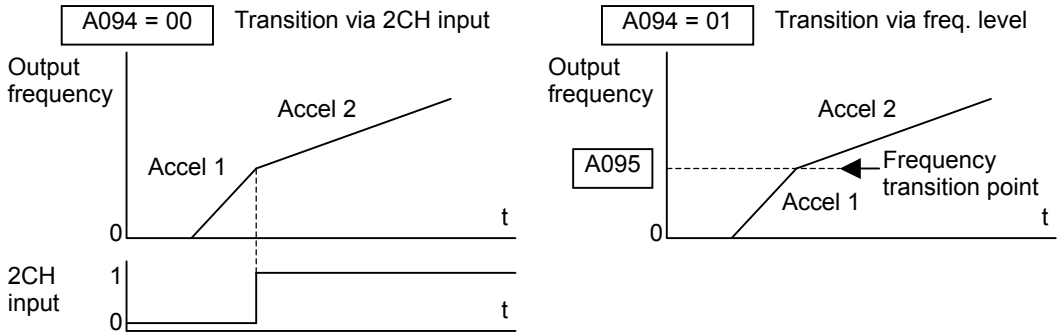

"A" Function			Run Mode Edit	Defaults		
Func. Code	Name / SRW Display	Description		-FE2 (EU)	-FU2 (USA)	Units
A092	Acceleration (2) time setting **ACC 2 0015.00s**	Duration of 2nd segment of acceleration, range is: 0.01 to 3000 sec.	✓	15.00	15.00	sec
A292	Acceleration (2) time setting, 2nd motor **2ACC2 0015.00s**	Duration of 2nd segment of acceleration, 2nd motor, range is: 0.01 to 3000 sec.	✓	15.00	15.00	sec
A093	Deceleration (2) time setting **DEC 2 0015.00s**	Duration of 2nd segment of deceleration, range is: 0.01 to 3000 sec.	✓	15.00	15.00	sec
A293	Deceleration (2) time setting, 2nd motor **2DEC2 0015.00s**	Duration of 2nd segment of deceleration, 2nd motor, range is: 0.01 to 3000 sec.	✓	15.00	15.00	sec
A094	Select method to switch to Acc2/Dec2 profile **ACC CHG TM**	Two options for switching from 1st to 2nd accel/decel: 00…2CH input from terminal 01…Transition frequency	✗	00	00	–
A294	Select method to switch to Acc2/Dec2 profile, 2nd motor **2ACCCHG TM**	Two options for switching from 1st to 2nd accel/decel: 00…2CH input from terminal 01…Transition frequency (2nd motor)	✗	00	00	–

"A" Function			Run Mode Edit	Defaults		
Func. Code	Name / SRW Display	Description		-FE2 (EU)	-FU2 (USA)	Units
A095	Acc1 to Acc2 frequency transition point **ACC CHfr 0000.0Hz**	Output frequency at which Accel1 switches to Accel2, range is 0.0 to 400.0 Hz	✕	0.0	0.0	Hz
A295	Acc1 to Acc2 frequency transition point, 2nd motor **2ACCCHfr 0000.0Hz**	Output frequency at which Accel1 switches to Accel2, 2nd motor, range is 0.0 to 400.0 Hz	✕	0.0	0.0	Hz
A096	Dec1 to Dec2 frequency transition point **DEC CHfr 0000.0Hz**	Output frequency at which Decel1 switches to Decel2, range is 0.0 to 400.0 Hz	✕	0.0	0.0	Hz
A296	Dec1 to Dec2 frequency transition point, 2nd motor **2DECCHfr 0000.0Hz**	Output frequency at which Decel1 switches to Decel2, 2nd motor, range is 0.0 to 400.0 Hz	✕	0.0	0.0	Hz

NOTE: For A095 and A096 (and for 2nd motor settings), if you set a very rapid Acc1 or Dec1 time (less than 1.0 second), the inverter may not be able to change rates to Acc2 or Dec2 before reaching the target frequency. In that case, the inverter decreases the rate of Acc1 or Dec1 in order to achieve the second ramp to the target frequency.

Accel/Decel

Standard acceleration and deceleration is linear. The inverter CPU can also calculate an S-curve acceleration or deceleration curve as shown. This profile is useful for favoring the load characteristics in particular applications.

Curve settings for acceleration and deceleration are independently selected. To enable the S-curve, use function A097 (acceleration) and A098 (deceleration).

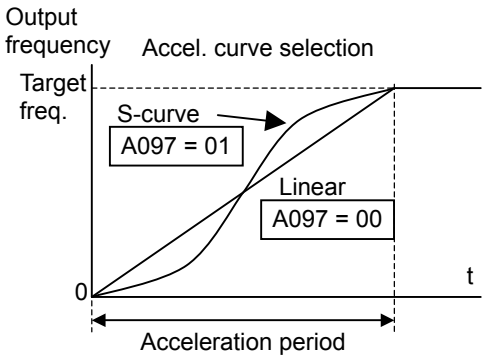

"A" Function			Run Mode Edit	Defaults		
Func. Code	Name / SRW Display	Description		-FE2 (EU)	-FU2 (USA)	Units
A097	Acceleration curve selection **ACC LINE L**	Set the characteristic curve of Acc1 and Acc2, two options: 00…linear 01…S-curve	✕	00	00	–
A098	Deceleration curve selection **DEC LINE L**	Set the characteristic curve of Dec1 and Dec2, two options: 00…linear 01…S-curve	✕	00	00	–

Additional Analog Input Settings

Input Range Settings – The parameters in the following table adjust the input characteristics of the analog current input. When using the inputs to command the inverter output frequency, these parameters adjust the starting and ending ranges for the current, as well as the output frequency range. Related characteristic diagrams are located in "Analog Input Settings" on page 3-13.

Analog sampling setting is the value specified in A016.

"A" Function			Run Mode Edit	Defaults		
Func. Code	Name / SRW Display	Description		-FE2 (EU)	-FU2 (USA)	Units
A101	[OI]-[L] input active range start frequency **OI-EXS 0000.0Hz**	The output frequency corresponding to the analog input range starting point, range is 0.0 to 400.0 Hz	✕	0.0	0.0	Hz
A102	[OI]-[L] input active range end frequency **OI-EXE 0000.0Hz**	The output frequency corresponding to the current input range ending point, range is 0.0 to 400.0 Hz	✕	0.0	0.0	Hz
A103	[OI]-[L] input active range start current **OI-EX%S 00000%**	The starting point (offset) for the current input range, range is 0. to 100.%	✕	0.	0.	%
A104	[OI]-[L] input active range end voltage **OI-EX%E 00000%**	The ending point (offset) for the current input range, range is 0. to 100.%	✕	100.	100.	%
A105	[OI]-[L] input start frequency enable **OI-LVL 0Hz**	Two options; select codes: 00…Use offset (A101 value) 01…Use 0Hz	✕	01	01	–

Refer to parameter A011 to A015 for analog voltage input.

NOTE: You cannot use voltage input and current input ([O] and [OI] input) at the same time on the X200₂ series inverter. Please do not connect the cable to [O] and [OI] terminals at the same time.

Analog Input Calculate Function – The inverter can mathematically combine two input sources into one value. The Calculate function can either add, subtract, or multiply the two selected sources. This provides the flexibility needed by various applications. You can use the result for the output frequency setting (use A001=10) or for the PID Process Variable (PV) input (use A075=03).

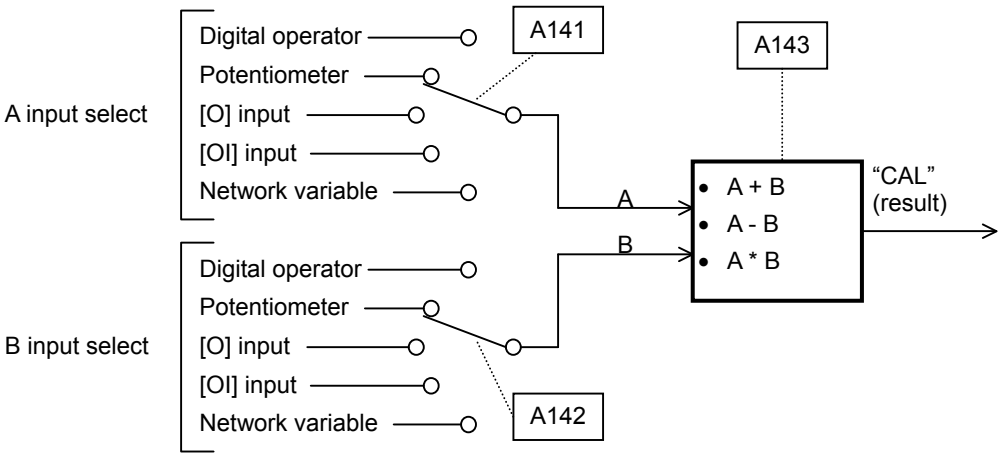

"A" Function			Run Mode Edit	Defaults		
Func. Code	Name / SRW Display	Description		-FE2 (EU)	-FU2 (USA)	Units
A141	A input select for calculate function **CALC Slct1 POT**	Five options: 00…Digital operator 01…Keypad potentiometer 02…[O] input 03…[OI] input 04…Network variable	✕	01	01	–
A142	B input select for calculate function **CALC Slct2 OI**	Five options: 00…Digital operator 01…Keypad potentiometer 02…[O] input 03…[OI] input 04…Network variable	✕	02	02	–
A143	Calculation symbol **CALC SMBL**	Calculates a value based on the A input source (A141 selects) and B input source (A142 selects). Three options: 00…ADD (A input + B input) 01…SUB (A input - B input) 02…MUL (A input * B input)	✕	00	00	–

NOTE: For A141 and A142, it is not possible to use [O] and [OI] together in calculation, because using both inputs at the same time on the X200₂ series inverter is not allowed.

Add Frequency – The inverter can add or subtract on offset value to the output frequency setting which is specified by A001 (will work with any of the five possible sources). The ADD Frequency is a value you can store in parameter A145. the ADD Frequency is summed with or subtracted from the output frequency setting only when the [ADD] terminal is ON. Function A146 selects whether to add or subtract. By configuring an intelligent input as the [ADD] terminal, your application can selectively apply the fixed value in A145 to offset (positively or negatively) the inverter output frequency in real time.

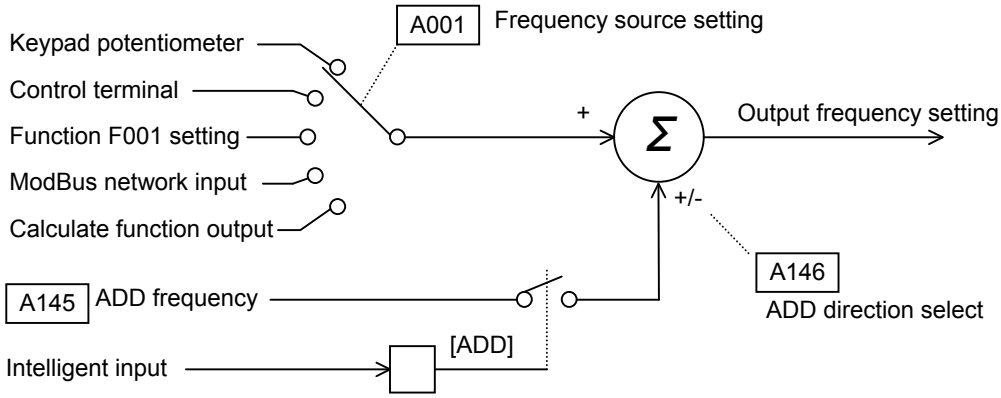

"A" Function			Run Mode Edit	Defaults		
Func. Code	Name / SRW Display	Description		-FE2 (EU)	-FU2 (USA)	Units
A145	ADD frequency **ST-PNT 0000.0Hz**	An offset value that is applied to the output frequency when the [ADD] terminal is ON. Range is 0.0 to 400.0 Hz	✓	0.0	0.0	Hz
A146	ADD direction select **ADD DIR PLUS**	Two options: 00…Plus (adds A145 value to the output frequency setting) 01…Minus (subtracts A145 value from the output frequency setting)	✗	00	00	–

Potentiometer Settings

Input Range Settings – The parameters in the following table adjust the input characteristics of the integrated potentiometer. When using the potentiometer to command the inverter output frequency, these parameters adjust the starting and ending ranges for the potentiometer, as well as the output frequency range.

"A" Function			Run Mode Edit	Defaults		
Func. Code	Name / SRW Display	Description		-FE2 (EU)	-FU2 (USA)	Units
A151	Pot. input active range start frequency **POT-EXS 0000.0Hz**	The output frequency corresponding to the pot. range starting point, range is 0.0 to 400.0 Hz	✗	0.0	0.0	Hz
A152	Pot. input active range end frequency **POT-EXE 0000.0Hz**	The output frequency corresponding to the pot. range ending point, range is 0.0 to 400.0 Hz	✗	0.0	0.0	Hz
A153	Pot. input active range start **POT-EX%S 00000%**	The starting point (offset) for the potentiometer range, range is 0. to 100.%	✗	0.	0.	%
A154	Pot. input active range end **POT-EX%E 00000%**	The ending point (offset) for the potentiometer range, range is 0. to 100.%	✗	100.	100.	%
A155	Pot. input start frequency enable **POT-LVL 0Hz**	Two options; select codes: 00…Use offset (A151 value) 01…Use 0Hz	✗	01	01	–

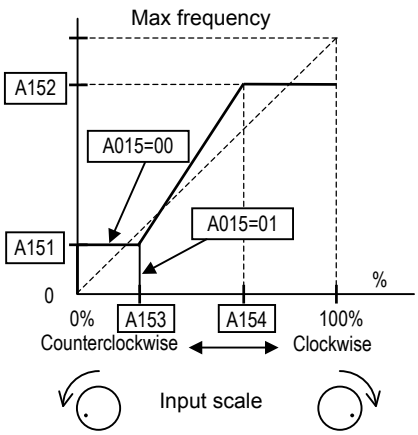

"B" Group: Fine Tuning Functions

The "B" Group of functions and parameters adjust some of the more subtle but useful aspects of motor control and system configuration.

Automatic Restart Mode

The restart mode determines how the inverter will resume operation after a fault causes a trip event. The four options provide advantages for your applications. Frequency matching allows the inverter to read the motor speed by virtue of its residual magnetic flux and restart the output at the corresponding frequency. The inverter can attempt a restart a certain number of times depending on the particular trip event:

- Over-current trip, restart up to 3 times
- Over-voltage trip, restart up to 3 times
- Under-voltage trip, restarts up to 16 time

When the inverter reaches the maximum number of restarts (3 or 16), you must power cycle the inverter to reset its operation.

Other parameters specify the allowable under-voltage level and the delay time before restarting. The proper settings depend on the typical fault conditions for your application, the necessity of restarting the process in unattended situations, and whether restarting is always say.

Power failure < allowable power fail Time (B022), Inverter resumes

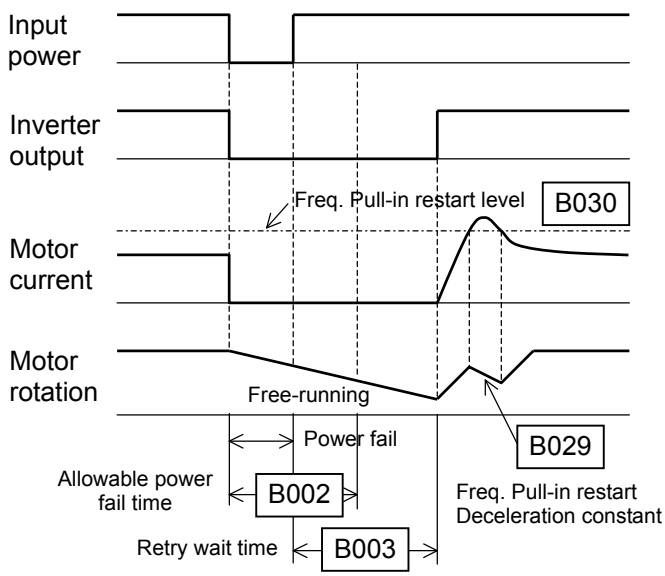

If the actual power failure time is shorter than the B002 set value, inverter resumes from the set frequency in B011.

The resumption mode is called "frequency pull-in" and the inverter performs reduced voltage start to avoid over-current trip.

If the motor current exceeds the B030 set value during this period, the inverter decelerates according to the B029 set value and helps to reduce the motor current.

When the motor current is less than B030, the inverter increases motor speed toward the set speed. The inverter continues this retry process until the motor speed comes to the previous set speed.

Overload restriction (B021~B028) is not valid when frequency pull-in is activated.

If the actual power failure time is longer than the B002 set value, the inverter does not resume and the motor will coast to stop.

"B" Function			Run Mode Edit	Defaults		
Func. Code	Name / SRW Display	Description		-FE2 (EU)	-FU2 (USA)	Units
B001	Selection of automatic restart mode IPS POWR ALM	Select inverter restart method, Four option codes: 00…Alarm output after trip, no automatic restart 01…Restart at 0Hz 02…Resume operation after frequency pull-in 03…Resume previous freq. after freq. pull-in, then decelerate to stop and display trip info	✗	00	00	–
B002	Allowable under-voltage power failure time IPS Time 0001.0s	The amount of time a power input under-voltage can occur without tripping the power failure alarm. Range is 0.3 to 25 sec. If under-voltage exists longer than this time, the inverter trips, even if the restart mode is selected.	✗	1.0	1.0	sec.
B003	Retry wait time before motor restart IPS Wait 0001.0s	Time delay after under-voltage condition goes away, before the inverter runs motor again. Range is 0.3 to 100 seconds.	✗	1.0	1.0	sec.
B004	Instantaneous power failure / under-voltage trip alarm enable IPS TRIP OFF	Two option codes: 00…Disable 01…Enable	✗	00	00	–
B005	Number of restarts on power failure / under-voltage trip events IPS RETRY 16	Two option codes: 00…Restart 16 times 01…Always restart	✗	00	00	–

Frequency Pull-in Restart

"B" Function			Run Mode Edit	Defaults		
Func. Code	Name / SRW Display	Description		-FE2 (EU)	-FU2 (USA)	Units
B011	Start freq to be used in case of frequency pull-in restart FSch Md CUTOFF	Three option codes: 00…freq at previous shutoff 01…start from max. Hz 02…start from set frequency	✗	00	00	–
B029	Deceleration rate of frequency pull-in restart setting FSch CNS 0000.5s	Sets the deceleration rate when frequency pull-in restart, range is 0.1 to 3000.0, resolution 0.1	✗	0.5	0.5	sec.
B030	Current level of frequency pull-in restart setting FSch LVL 002.60A	Sets the current level of frequency pull-in restart, range is 0.2*inverter rated current to 2.0*inverter rated current, resolution 0.1	✗	Rated current		A

Electronic Thermal Overload Alarm Setting

The thermal overload detection protects the inverter and motor from overheating due to an excessive load. It uses a current/inverse time curve to determine the trip point.

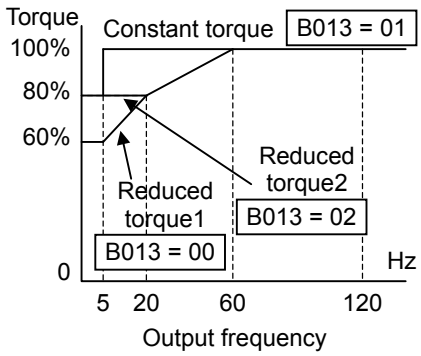

First, use B013 to select the torque characteristic that matches your load. This allows the inverter to utilize the best thermal overload characteristic for your application.

The torque developed in a motor is directly proportional to the current in the windings, which is also related to the heat generated (and temperature, over time).

Therefore, you must set the thermal overload threshold in terms of current (amperes) for parameter B012. The range is 20% to 100% of the rated current for each inverter model. If the current exceeds the level you specify, the inverter will trip and log an event (error E05) in the history table. The inverter turns the motor output OFF when tripped. Separate settings are available for the second motor (if applicable) as shown in the following table.

"B" Function			Run Mode Edit	Defaults		
Func. Code	Name / SRW Display	Description		-FE2 (EU)	-FU2 (USA)	Units
B012	Level of electronic thermal setting **E-THM LVL 001.60A**	Set a level between 20% and 100% for the rated inverter current.	✕	Rated current for each inverter model *1		A
B212	Level of electronic thermal setting, 2nd motor **2ETHM LVL 001.60A**	Set a level between 20% and 100% for the rated inverter current.	✕			A
B013	Electronic thermal characteristic **E-THM CHAR CRT**	Select from three curves, option codes: 00…Reduced torque 1 01…Constant torque 02…Reduced torque 2	✕	01	01	–
B213	Electronic thermal characteristic, 2nd motor **2ETHM CHAR CRT**	Select from three curves, option codes: 00…Reduced torque 1 01…Constant torque 02…Reduced torque 2	✕	01	01	–

WARNING: When parameter B012, level of electronic thermal setting, is set to motor FLA rating (Full Load Ampere nameplate rating), the inverter provides solid state motor overload protection at 115% of motor FLA or equivalent. If parameter B012 exceeds the motor FLA rating, the motor may overheat and be damaged. Parameter B012, level of electronic thermal setting, is a variable parameter.

Overload Restriction

If the inverter's output current exceeds a preset current level you specify during acceleration or constant speed, the overload restriction feature automatically reduces the output frequency to restrict the overload. This feature does not generate an alarm or trip event. You can instruct the inverter to apply overload restriction only during constant speed, thus allowing higher currents for acceleration. Or, you may use the same threshold for both acceleration and constant speed.

When the inverter detects an overload, it must decelerate the motor to reduce the current until it s less than the threshold. You can choose the rate of deceleration that the inverter uses to lower the output current.

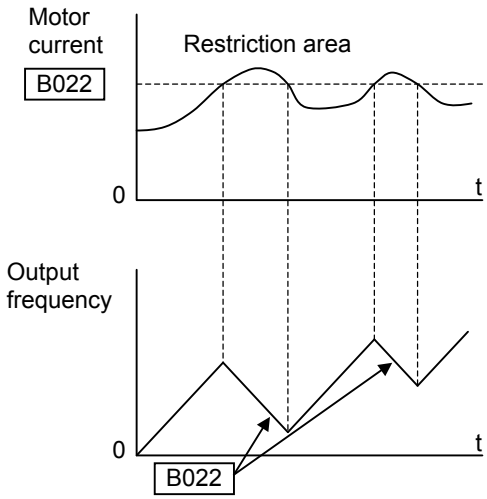

"B" Function			Run Mode Edit	Defaults		
Func. Code	Name / SRW Display	Description		-FE2 (EU)	-FU2 (USA)	Units
B021	Overload restriction operation mode **OL Mode ON**	Select the operation mode during overload conditions, three options, option codes: 00…Disabled 01…Enabled for acceleration and constant speed 02…Enabled for constant speed only	✗	01	01	–
B221	Overload restriction operation mode, 2nd motor **2OL Mode ON**		✗	01	01	–
B022	Overload restriction level setting **OL LVL 002.40A**	Sets the level for overload restriction, between 20% and 150% of the rated current of the inverter, setting resolution is 1% of rated current	✗	Rated current x 1.5		A
B222	Overload restriction level setting, 2nd motor **2OL LVL 002.40A**		✗	Rated current x 1.5		A
B023	Deceleration rate at overload restriction **OL Cnst 0001.0s**	Sets the deceleration rate when inverter detects overload, range is 0.1 to 30.0, resolution 0.1	✗	1.0	30.0	sec.
B223	Deceleration rate at overload restriction, 2nd motor **2OL Cnst 0001.0s**		✗	1.0	30.0	sec.
B028	Source of overload restriction selection **OL L_SLCT PARAM**	Two option codes: 00…set value of B022 01…[O] input	✗	00	00	–
B228	Source of overload restriction selection, 2nd motor **2OL L_SLCT PARAM**	Two option codes: 00…set value of B222 01…[O] input	✗	00	00	–

Frequency Pull-in Restart

See "Restart Mode Configuration" (B088) section on page 3-42.

Software Lock Mode

The software lock function keeps personnel from accidentally changing parameters in the inverter memory. Use B031 to select from various protection levels.

The table below lists all combinations of B031 option codes and the ON/OFF state of the [SFT] input. Each Check ✓ or Ex ✗ indicates whether the corresponding parameter(s) can be edited. The Standard Parameters column below shows access in permitted for some lock modes. These refer to the parameter tables throughout this chapter, each of which includes a column titled *Run Mode Edit* as shown to the right.

	Run Mode Edit	
	✗	
	✓	

The marks (Check ✓ or Ex ✗) under the "Run Mode Edit" column title indicate whether access applies to each parameter as defined in the table below. In some lock modes, you can edit only F001 and the Multi-speed parameter group that includes A020, A220, A021–A035, and A038 (Jog). However, it does not include A019, Multi-speed operation selection. The editing access to B031 itself is unique, and is specified in the right-most two columns below.

B031 Lock Mode	[SFT] Intelligent Input	Standard Parameters		F001 and Multi-Speed	B031	
		Stop	Run	Stop and Run	Stop	Run
00	OFF	✓	Run mode edit access	✓	✓	✗
	ON	✗	✗	✗	✓	✗
01	OFF	✓	Run mode edit access	✓	✓	✗
	ON	✗	✗	✓	✓	✗
02	(ignored)	✗	✗	✗	✓	✗
03	(ignored)	✗	✗	✓	✓	✗
10	(ignored)	✓	High level access	✓	✓	✓

NOTE: Since the software lock function B031 is always accessible, this feature is not the same as password protection used in other industrial control devices.

"B" Function			Run Mode Edit	Defaults		
Func. Code	Name / SRW Display	Description		-FE2 (EU)	-FU2 (USA)	Units
B031	Software lock mode selection **S-Lock MD1**	Prevents parameter changes, in four options, option codes: 00…all parameters except B031 are locked when [SFT] terminal is ON 01…all parameters except B031 and output frequency F001 are locked when [SFT] terminal is ON 02…all parameters except B031 are locked 03…all parameters except B031 and output frequency F001 are locked 10…High level access including B031 *See appendix C for the accessible parameters in this mode.*	✕	01	01	–

NOTE: To disable parameter editing when using B031 lock modes 00 and 01, assign the [SFT] function to one of the intelligent input terminals.
See "Software Lock" on page 4-21.

Controlled Stop Operation at Power Loss

Controlled stop operation at power loss helps avoid tripping or free-running (coasting) of the motor when power is lost while in run mode. The inverter controls the internal DC bus voltage while decelerating the motor, and brings the motor to a controlled stop.

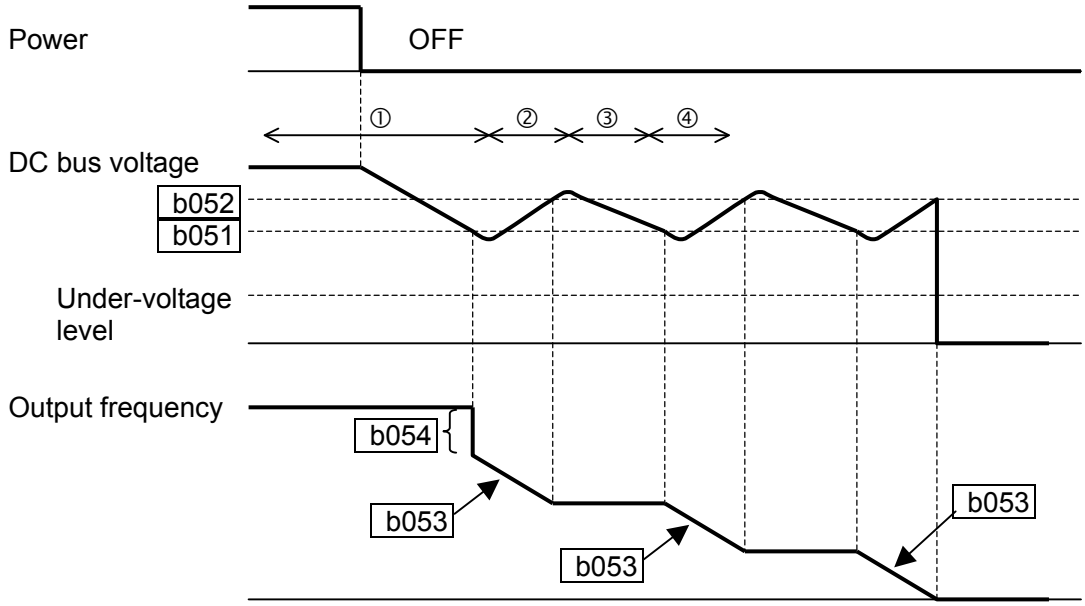

Should power be lost while the inverter is in run mode, this function will have the following effect:

① When the internal DC bus voltage of the inverter comes down to the set level of B051, the inverter decreases the output frequency by the amount set in B054. (During this interval the DC bus voltage rises due to regeneration, so does not reach the UV level.)

② The inverter then continues deceleration according to the value set in B053. If the DC bus voltage rises up to the set value of B052, the inverter stops deceleration to avoid OV tripping.

③ During this interval, the DC bus voltage decreases again due to lack of input power.

④ When the DC bus voltage comes down to the set value of B051, the inverter starts deceleration according to the set value of B053 again. This process will be repeated as needed until the motor is brought to a stop.

NOTE: If the DC bus voltage comes down to the UV level during this operation, the inverter trips with under-voltage and motor will free-run (coast) to a stop.

NOTE: If the set value of B052<B051, then the inverter internally swaps the B052 and B051 values. However the displayed values are not changed.

NOTE: This function cannot be interrupted until it is completed. So if the power is restored during this operation, wait until the operation is done (motor stops) and then give the run command.

"B" Function			Run Mode Edit	Defaults		
Func. Code	Name / SRW Display	Description		-FE2 (EU)	-FU2 (USA)	Units
B050	Selection of controlled stop operation IPS MODE OFF	Two option codes: 00…Disabled 01…Enabled (stop) 02…Enabled (restart)	✕	00	00	–
B051	Controlled stop operation start voltage setting IPS V 0000.0V	Setting of DC bus voltage to start controlled stop operation. Range is 0.0 to 1000.0	✕	0.0	0.0	V
B052	OV-LAD Stop level of controlled stop operation setting IPS OV 0000.0V	Setting the OV-LAD stop level of controlled stop operation. Range is 0.0 to 1000.0	✕	0.0	0.0	V
B053	Deceleration time of controlled stop operation setting IPS DEC 0001.0s	Range is 0.01 to 3000	✕	1.0	1.0	sec
B054	Frequency drop for quick deceleration setting IPS F 0000.0Hz	Setting of the first quick drop in frequency. Range is 0.0 to 10.0	✕	0.0	0.0	Hz

Miscellaneous Settings

The miscellaneous settings include scaling factors, initialization modes, and others. This section covers some of the most important settings you may need to configure.

B080: [AM] analog signal gain –This parameter allows you to scale the analog output [AM] relative to the monitored variable. Use together with C086 (AM offset adjustment) to get required performance.

B082: Start frequency adjustment – When the inverter starts to run, the output frequency does not ramp from 0Hz. Instead, it steps directly to the *start frequency* (B082), and the ramp proceeds upward from there.

B083: Carrier frequency adjustment – The internal *switching frequency* of the inverter circuitry (also called the *chopper frequency*). It is called the carrier frequency because the lower AC power frequency of the inverter "rides" the carrier. The faint, high-pitched sound you hear when the inverter is in Run Mode is characteristic of switching power supplies in general. The carrier frequency is adjustable from 2.0kHz to 12kHz. The audible sound decreases at the higher frequencies, but RFI noise and leakage current may be increased. Refer to the specification derating curves in Chapter 1 to determine the maximum allowable carrier frequency setting for your particular inverter and environmental conditions.

NOTE: The carrier frequency setting must stay within specified limits for inverter-motor applications that must comply with particular regulatory agencies. For example, a European CE-approved application requires the inverter carrier to be 3kHz or less.

B084, B085: Initialization codes – These functions allow you to restore the factory default settings. Please refer to "Restoring Factory Default Settings" on page 6-8.

B086: Frequency display scaling – You can convert the output frequency monitor on D001 to a scaled number (engineering units) monitored at function D007. for example, the motor may run a conveyor that is monitored in feet per minute. Use this formula:

Scaled output frequency (D007) = Output frequency (D001) x Factor (B086)

"B" Function			Run Mode Edit	Defaults		
Func. Code	Name / SRW Display	Description		-FE2 (EU)	-FU2 (USA)	Units
B080	[AM] analog signal gain **AM-Adj 00100%**	Adjust of analog output at terminal [AM], range is 0 to 255	✓	100.	100.	–
B082	Start frequency adjustment **fmin 0000.5Hz**	Sets the starting frequency for the inverter output, range is 0.5 to 9.9 Hz	✗	0.5	0.5	Hz
B083	Carrier frequency setting **Carrier 0003.0**	Sets the PWM carrier (internal switching frequency), range is 2.0 to 12.0 kHz	✗	3.0	3.0	kHz
B084	Initialization mode (parameters or trip history) **INIT Mode TRP**	Select the type of initialization to occur, three option codes: 00…Trip history clear 01…Parameter initialization 02… Trip history clear and parameter initialization	✗	00	00	–
B085	Country for initialization **INIT Slct EU**	Select default parameter values for country on initialization, three option codes: 00…Japan 01…Europe 02…US	✗	01	02	–
B086	Frequency scaling conversion factor **Cnv Gain 0001.0**	Specify a constant to scale the displayed frequency for D007 monitor, range is 0.1 to 99.9	✓	1.0	1.0	–
B087	STOP key enable **STP Key ON**	Select whether the STOP key on the keypad is enabled, two option codes: 00…Enabled 01…Disabled	✗	00	00	–

B091/B088: Stop Mode / Restart Mode Configuration – You can configure how the inverter performs a standard stop (each time Run FWD and REV signals turn OFF). Setting B091 determines whether the inverter will control the deceleration, or whether it will perform a free-run stop (coast to a stop). When using the free-run stop selection, it is imperative to also configure how you want the inverter to resume control of motor speed. Setting B088 determines whether the inverter will ensure the motor always resumes at 0 Hz, or whether the motor resumes from its current coasting speed (also called *frequency pull-in*). The run command may turn OFF briefly, allowing the motor to coast to a slower speed from which normal operation can resume.

In most applications a controlled deceleration is desirable, corresponding to B091=00. However, applications such as HVAC fan control will often use a free-run stop (B091=01). This practice decreases dynamic stress on system components, prolonging system life. In this case, you will typically set B088=01 in order to resume from the current speed after a free-run stop (see diagram down below: frequency pull-in resume). Note that using the default setting, B088=00, can cause trip events when the inverter attempts to force the load quickly to zero speed.

NOTE: Other events can cause (or be configured to cause) a free-run stop, such as power loss (see "Automatic Restart Mode" on page 3-32), or an intelligent input terminal [FRS] signal. If all free-run stop behavior is important to your application (such as HVAC), be sure to configure each event accordingly.

An additional parameter further configures all instances of a free-run stop. Parameter B003, Retry Wait Time Before Motor Restart, sets the minimum time the inverter will free-run. For example, if B003 = 4 seconds (and B091=01) and the cause of the free-run stop lasts 10 seconds, the inverter will free-run (coast) for a total of 14 seconds before driving the motor again.

The figure at below right describes how Frequency pull-in resume operates. After waiting the time set in B003, the inverter tries to catch the speed of the motor shaft and outputs the speed set in B011. At this time, if the motor current rises up to the value set in B030, the inverter decreases the frequency according to the deceleration time set in B029, and finally comes to the required speed. Following are the related parameters for this control.

Code	Parameter contents
B011	Start freq to be used in case of freq matching restart
B029	Deceleration rate of frequency matching restart setting
B030	Current level of frequency matching restart setting
B088	Restart mode after FRS
B091	Stop mode selection

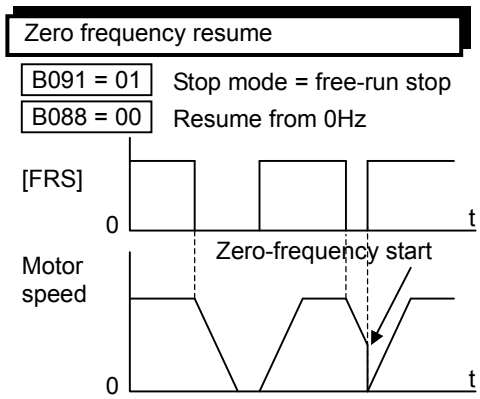

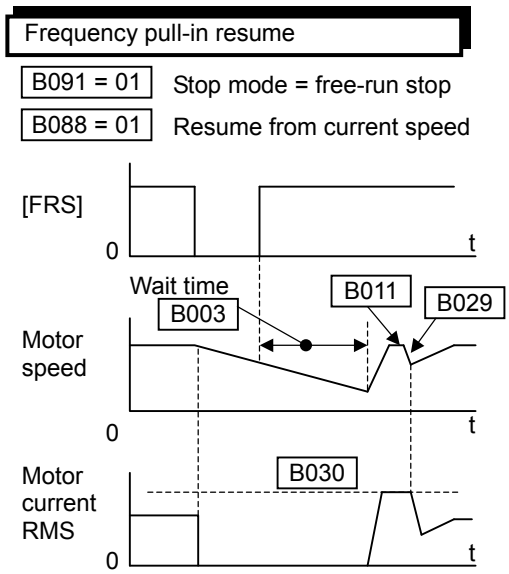

"B" Function			Run Mode Edit	Defaults		
Func. Code	Name / SRW Display	Description		-FE2 (EU)	-FU2 (USA)	Units
B088	Restart mode after FRS **RUN FRS ZST**	Selects how the inverter resumes operation when free-run stop (FRS) is cancelled, two options: 00…Restart from 0Hz 01…Restart from frequency detected from real speed of motor (frequency pull-in)	✕	00	00	–
B091	Stop mode selection **STOP DEC**	Select how the inverter stops the motor, two option codes: 00…DEC (decelerate to stop) 01…FRS (free-run to stop)	✕	00	00	–

B089: Monitor display select for networked inverter – When the X200₂ inverter is controlled via network, the inverter's keypad display can still provide Monitor Mode. The D00x parameter selected by function B089 will be displayed on the keypad. See "Local Monitoring During Network Operation" on page 3-8 for more details.

B092: Cooling Fan Control – You can select the performance of the cooling fan (if your inverter model includes a fan). This function controls whether the cooling fan stops or keeps on running after the inverter stops the motor. This can result in an additional energy saving and extends fan life.

"B" Function			Run Mode Edit	Defaults		
Func. Code	Name / SRW Display	Description		-FE2 (EU)	-FU2 (USA)	Units
B089	Monitor display select for networked inverter **PANEL d001**	Selects the parameter displayed on the keypad display when the inverter is networked, 7 options: 01…Output frequency monitor 02…Output current monitor 03…Rotation direction monitor 04…Process variable (PV), PID feedback monitor 05…Intelligent input terminal status 06…Intelligent output terminal status 07…Scaled output frequency monitor	✓	01	01	–
B092	Cooling fan control **FAN-CTRL OFF**	Selects when the fan is ON during inverter operation, three options: 00…Fan is always ON 01…Fan is ON during run, OFF during stop (5 minute delay from ON to OFF) 02…Fan is temperature controlled	✗	00	00	–

B130, B131: Over-voltage LAD Stop Enable / Level – The over-voltage LADSTOP function monitors the DC bus voltage and actively changes the output frequency profile to maintain the DC bus voltage within settable limits. Although "LAD" refers to "linear acceleration / deceleration", the inverter only "STOPs" the deceleration ramp so that regenerative voltage will not cause the DC bus to rise enough to cause an over-voltage trip event. Note that acceleration is not affected.

The graph at right shows an inverter output profile that starts deceleration to a stop. At two different points during the deceleration, regenerative voltage elevates the DC bus level, exceeding the LADSTOP threshold set by B131.

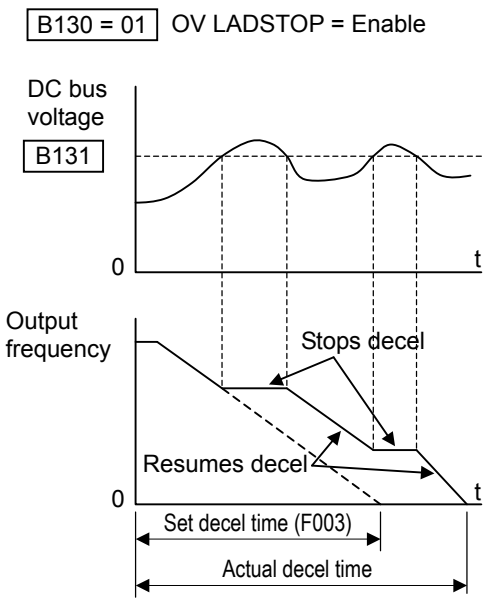

When the Over-voltage LADSTOP feature is enabled by setting B130 = 01, the inverter stops the deceleration ramp in each case until the DC bus level is again less than the threshold value.

When using the Over-voltage LADSTOP feature, please note the following:

- When the feature is enabled (B130 = 01), the actual deceleration is sometimes longer than the value set by parameters F003/F203.
- The over-voltage LADSTOP feature does not operate by maintaining a constant DC bus voltage. So it is still possible to have an over-voltage trip event during extreme deceleration.
- If B131 is set *lower* than the normal DC bus voltage (when *not* in decel) by mistake, or if the inverter's input voltage increases enough, then the inverter will apply LADSTOP (if enabled) all the time. In this case, the inverter can accelerate and run the motor, but it cannot decelerate. If you are not sure that B131 > DC bus voltage, measure the DC bus voltage in your installation and verify that the B131 value is higher.

"B" Function			Run Mode Edit	Defaults		
Func. Code	Name / SRW Display	Description		-FE2 (EU)	-FU2 (USA)	Units
B130	Over-voltage LADSTOP enable **OVLADSTOP OFF**	Pauses deceleration ramp when DC bus voltage rises above threshold level, in order to avoid over-voltage trip. 00…Disable 01…Enable	✗	00	00	–
B131	Over-voltage LADSTOP level **LADST LVL 0 0380V**	Sets the threshold level for over-voltage LADSTOP. When the DC bus voltage is above the threshold value, the inverter stops deceleration until the DC bus voltage is less than the threshold setting again. Two voltage ranges with 1V resolution: 330 to 395V (200V class) 660 to 790V (400V class)	✓	380/ 760	380/ 760	V

DC Bus AVR for Deceleration Settings

This function is to achieve stable DC bus voltage in case of deceleration. DC bus voltage rises due to regeneration during deceleration. When this function is activated (B133=01), inverter controls the deceleration time so that the DC bus voltage not to go up to the overvoltage trip level, and leads to the trip-less operation during deceleration.

Please note that the actual deceleration time may be longer in this case.

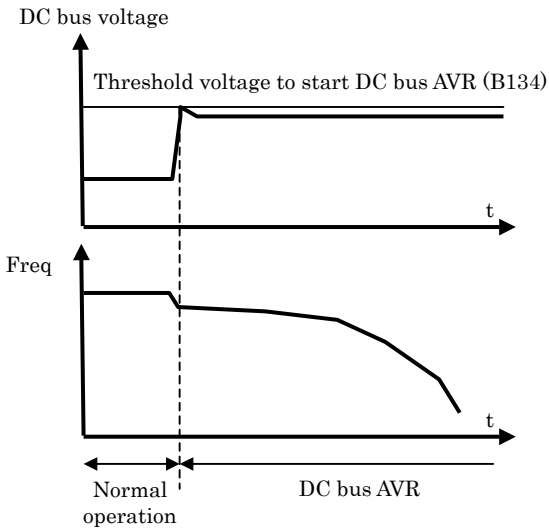

"B" Function			Run Mode Edit	Defaults		
Func. Code	Name / SRW Display	Description		-FE2 (EU)	-FU2 (USA)	Units
B055	DC bus AVR for decel. P-gain VpnP 0000.2s	Proportional gain adjustment for DC bus AVR function. Range is: 0.2 to 5.0	✓	0.2	0.2	–
B056	DC bus AVR for decel. I-time VpnI 0000.2s	Integration time adjustment for DC bus AVR function. Range is: 0.0 to 150.0	✓	0.2	0.2	sec
B133	DC bus AVR selection Vpn AVR OFF	00…Disabled 01…Enabled	✗	00	00	–
B134	Threshold voltage of DC bus AVR setting Vpn LVL 00380V	Setting of threshold voltage of DC bus voltage to start DC bus AVR function. Range is: 200V class…330 to 395 400V class…660 to 790	✗	380 /760	380 /760	V

Difference between OV LAD STOP and DC bus AVR

This function is similar to OV LAD STOP (B130,B131) from the OV trip-less point of view. The DC bus AVR has the higher priority when both OV LAD STOP function and DC bus AVR function is set enabled.

	OV LAD STOP	DC bus AVR
Actual deceleration time	Short	Long
Fluctuation of the DC bus voltage	Big	Small

Please select the suitable function according to your system.

Miscellaneous Settings (continued)

B140: Over-current Trip Suppression – The Over-current Trip Suppression function monitors the motor current and actively changes the output frequency profile to maintain the motor current within the limits. Although "LAD" refers to "linear acceleration / deceleration", the inverter only "STOPs" the acceleration and deceleration ramp so that it will not cause an over-current trip event.

The graph at right shows an inverter output profile that starts acceleration to a constant speed. At two different points during the acceleration, motor current increases and exceeds the fixed level of Over-current Trip Suppression level.

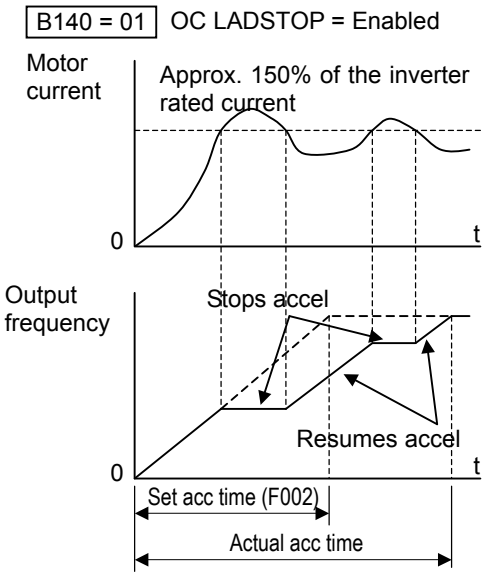

When the Over-current Trip Suppression feature is enabled by B140 = 01, the inverter stops the acceleration ramp in each case until the motor current level is again less than the threshold value, which is approximately 150% of the rated current of the inverter.

When using the Over-current Trip Suppression feature, please note the following:

- When the feature is enabled (B140 = 01), the actual acceleration may be longer than the value set by parameters F002/F202 in some cases.
- The Over-current Trip Suppression feature does not operate by maintaining a constant motor current. So it is still possible to have an over-current trip event during extreme acceleration.

B150: Carrier Mode – When the Carrier Mode is enabled (B150 = 01), the inverter detects the motor current and automatically reduces the carrier frequency when it rises up to a certain level.

B151: Selection of Ready function – When the Ready function is enabled (B151 = 01), then the inverter outputs devices are ON even when the motor is stopped. Keeping all the internal power output components energized allows the idle time between the RUN command and actual PWM output to be shortened.

HIGH VOLTAGE: When set RDY function ON, there will be a voltage appearing at motor output terminals U, V and W even if the motor is in stop mode. Never touch the inverter power terminal when the inverter is powered up.

"B" Function			Run Mode Edit	Defaults		
Func. Code	Name / SRW Display	Description		-FE2 (EU)	-FU2 (USA)	Units
B140	Over-current trip suppression **I-SUP Mode OFF**	Two option codes: 00…Disable 01…Enable	✗	01	01	–
B150	Carrier mode **Cr-DEC OFF**	Automatically reduces the carrier frequency as the ambient temperature increases. 00…Disable 01…Enable	✗	00	00	–
B151	Selection of RDY function **RDY-FUNC OFF**	Select Ready function. 00…Disable 01…Enable	✓	00	00	–

"C" Group: Intelligent Terminal Functions

The five input terminals [1], [2], [3], [4], and [5] can be configured for any of 31 different functions. The next two tables show how to configure the five terminals. The inputs are logical, in that they are either OFF or ON. We define these states as OFF=0, and ON=1.

The inverter comes with default options for the five terminals. These settings are initially unique, each one having its own setting. Note that European and US versions have different default settings. You can use any option on any terminal, and even use the same option twice to create a logical OR (though usually not required).

NOTE: Terminal [5] has the ability to be a logical input, and to be an analog input for a thermistor device when PTC function (option code 19) is assigned to that terminal.

Input Terminal Configuration

Functions and Options – The *function codes* in the following table let you assign one of twenty eight options to any of the five logic inputs for the X200₂ inverters. The functions C001 through C005 configure the terminals [1] through [5] respectively. The "value" of these particular parameters is not a scalar value, but it is a discrete number that selects one option from many available *options*.

For example, if you set function C001=00, you have assigned option 00 (Forward Run) to terminal [1]. The option codes and the specifics of how each one works are in Chapter 4.

"C" Function			Run Mode Edit	Defaults		
Func. Code	Name / SRW Display	Description		-FE2 (EU)	-FU2 (USA)	Units
C001	Terminal [1] function IN-TM 1 FW	Select input terminal [1] function, 30 options(see next section)	✕	00 [FW]	00 [FW]	–
C201	Terminal [1] function, 2nd motor 2IN-TM 1 FW	Select input terminal [1] function for 2nd motor, 30 options(see next section)	✕			
C002	Terminal [2] function IN-TM 2 RV	Select input terminal [2] function, 30 options(see next section)	✕	01 [RV]	01 [RV]	–
C202	Terminal [2] function, 2nd motor 2IN-TM 2 RV	Select input terminal [2] function for 2nd motor, 30 options(see next section)	✕			
C003	Terminal [3] function IN-TM 3 AT	Select input terminal [3] function, 30 options(see next section)	✕	02 [CF1]	16 [AT]	–
C203	Terminal [3] function, 2nd motor 2IN-TM 3 AT	Select input terminal [3] function for 2nd motor, 30 options(see next section)	✕	02 [CF1]	16 [AT]	
C004	Terminal [4] function IN-TM 4 USP	Select input terminal [4] function, 30 options(see next section)	✕	03 [CF2]	13 [USP]	–
C204	Terminal [4] function, 2nd motor 2IN-TM 2 USP	Select input terminal [4] function for 2nd motor, 30 options(see next section)	✕			
C005	Terminal [5] function IN-TM 5 2CH	Select input terminal [5] function, 30 options(see next section)	✕	18 [RS]	18 [RS]	–
C205	Terminal [5] function, 2nd motor IN-TM 5 2CH	Select input terminal [5] function for 2nd motor, 30 options(see next section)	✕			

The input logic conversion is programmable for each of the six inputs default to normally open (active high), but you can select normally closed (active low) in order to invert the sense of the logic.

"C" Function			Run Mode Edit	Defaults		
Func. Code	Name / SRW Display	Description		-FE2 (EU)	-FU2 (USA)	Units
C011	Terminal [1] active state O/C-1 NO	Select logic conversion, two option codes: 00…normally open [NO] 01…normally closed [NC]	✕	00	00	–
C012	Terminal [2] active state O/C-2 NO	Select logic conversion, two option codes: 00…normally open [NO] 01…normally closed [NC]	✕	00	00	–
C013	Terminal [3] active state O/C-3 NO	Select logic conversion, two option codes: 00…normally open [NO] 01…normally closed [NC]	✕	00	00	–
C014	Terminal [4] active state O/C-4 NC	Select logic conversion, two option codes: 00…normally open [NO] 01…normally closed [NC]	✕	00	01	–
C015	Terminal [5] active state O/C-5 NO	Select logic conversion, two option codes: 00…normally open [NO] 01…normally closed [NC]	✕	00	00	–

NOTE: An input terminal configured for option code 18 ([RS] Reset command) cannot be configured for normally closed operation.

Intelligent Input Terminal Overview

Each of the five intelligent terminals may be assigned any of the options in the following table. When you program one of the option codes for terminal assignments C001 to C005, the respective terminal assumes the function role of that option code. The terminal functions have a symbol or abbreviation that we use to label a terminal using that function. For example, the "Forward Run" command is [FW]. The physical label on the terminal block connector is simply 1, 2, 3, 4, or 5. However, schematic examples in this manual also use the terminal symbol (such as [FW]) to show the assigned option. The option codes for C011 to C015 determines the active state of the logical input (active high or active low).

Input Function Summary Table – This table shows all thirty-one intelligent input functions at a glance. Detailed description of these functions, related parameters and settings, and example wiring diagrams are in "Using Intelligent Input Terminals" on page 4-8.

Input Function Summary Table				
Option Code	Terminal Symbol	Function Name	Description	
00	FW	FORWARD Run/Stop	ON	Inverter is in Run Mode, motor runs forward
			OFF	Inverter is in Stop Mode, motor stops
01	RV	Reverse Run/Stop	ON	Inverter is in Run Mode, motor runs reverse
			OFF	Inverter is in Stop Mode, motor stops
02	CF1 *1	Multi-speed Select, Bit 0 (LSB)	ON	Binary encoded speed select, Bit 0, logical 1
			OFF	Binary encoded speed select, Bit 0, logical 0
03	CF2	Multi-speed Select, Bit 1	ON	Binary encoded speed select, Bit 1, logical 1
			OFF	Binary encoded speed select, Bit 1, logical 0
04	CF3	Multi-speed Select, Bit 2	ON	Binary encoded speed select, Bit 2, logical 1
			OFF	Binary encoded speed select, Bit 2, logical 0
05	CF4	Multi-speed Select, Bit 3 (MSB)	ON	Binary encoded speed select, Bit 3, logical 1
			OFF	Binary encoded speed select, Bit 3, logical 0
06	JG	jogging	ON	Inverter is in Run Mode, output to motor runs at jog parameter frequency
			OFF	Inverter is in Stop Mode
07	DB	External DC braking	ON	DC braking will be applied during deceleration
			OFF	DC braking will not be applied
08	SET	Set (select) 2nd Motor Data	ON	The inverter uses 2nd motor parameters for generating frequency output to motor
			OFF	The inverter uses 1st (main) motor parameters for generating frequency output to motor
09	2CH	2-stage Acceleration and Deceleration	ON	Frequency output uses 2nd-stage acceleration and deceleration values
			OFF	Frequency output uses standard acceleration and deceleration values
11	FRS	Free-run Stop	ON	Causes output to turn OFF, allowing motor to free run (coast) to stop
			OFF	Output operates normally, so controlled deceleration stop motor
12	EXT	External Trip	ON	When assigned input transitions OFF to ON, inverter latches trip event and displays E12
			OFF	No trip event for ON to OFF, any recorded trip events remain in history until reset
13	USP	Unattended Start Protection	ON	On powerup, the inverter will not resume a Run command (mostly used in the US)
			OFF	On powerup, the inverter will resume a Run command that was active before power loss
15	SFT	Software Lock	ON	The keypad and remote programming devices are prevented from changing parameters
			OFF	The parameters may be edited and stored
16	AT	Analog Input Voltage/Current Select	ON	Refer to "Analog Input Settings" on page 3-13.
			OFF	
18	RS	Reset Inverter	ON	The trip condition is reset, the motor output is turned OFF, and powerup reset is asserted
			OFF	Normal power-ON operation

Input Function Summary Table				
Option Code	Terminal Symbol	Function Name	Description	
19	PTC	PTC thermistor Thermal Protection	ANLG	When a thermistor is connected to terminal [5] and [L], the inverter checks for over-temperature and will cause trip event and turn OFF output to motor
			OPEN	A disconnect of the thermistor causes a trip event, and the inverter turns OFF the motor
20	STA	Start (3-wire interface)	ON	Starts the motor rotation
			OFF	No change to present motor status
21	STP	Stop (3-wire interface)	ON	Stops the motor rotation
			OFF	No change to present motor status
22	F/R	FWD, REV (3-wire interface)	ON	Selects the direction of motor rotation: ON = FWD. While the motor is rotating, a change of F/R will start a deceleration, followed by a change in direction
			OFF	Selects the direction of motor rotation: OFF = REV. While the motor is rotating, a change of F/R will start a deceleration, followed by a change in direction
23	PID	PID Disable	ON	Temporarily disables PID loop control. Inverter output turns OFF as long as PID Enable is active (A071=01)
			OFF	Has no effect on PID loop operation, which operates normally if PID Enable is active (A071=01)
24	PIDC	PID Reset	ON	Resets the PID loop controller. The main consequence is that the integrator sum is forced to zero
			OFF	No effect on PID controller
27	UP	Remote Control UP Function (motorized speed pot.)	ON	Accelerates (increases output frequency) motor from current frequency
			OFF	Output to motor operates normally
28	DWN	Remote Control Down Function (motorized speed pot.)	ON	Decelerates (decreases output frequency) motor from current frequency
			OFF	Output to motor operates normally
29	UDC	Remote Control Data Clearing	ON	Clears the UP/DWN frequency memory by forcing it to equal the set frequency parameter F001. Setting C101 must be set=00 to enable this function to work
			OFF	UP/DWN frequency memory is not changed
31	OPE	Operator Control	ON	Forces the source of the output frequency setting A001 and the source of the Run command A002 to be from the digital operator
			OFF	Source of output frequency set by A001 and source of Run command set by A002 is used

Input Function Summary Table				
Option Code	Terminal Symbol	Function Name	Description	
50	ADD	ADD frequency enable	ON	Adds the A145 (add frequency) value to the output frequency
			OFF	Does not add the A145 value to the output frequency
51	F-TM	Force Terminal Mode	ON	Force inverter to use input terminals for output frequency and Run command sources
			OFF	Source of output frequency set by A001 and source of Run command set by A002 is used
52	RDY *	Inverter Ready	ON	To charge up the internal boot-strap capacitor so to start motor immediately after the RUN command is given.
			OFF	Inverter operates normal.
53	SP-SET	Special set	ON	The inverter uses 2nd motor parameters for generating frequency output to motor. The selection of 1st or 2nd motor is available during Stop Mode or Run Mode.
			OFF	The inverter uses 1st (main) motor parameters for generating frequency output to motor.
64	EMR *	Safe stop	ON	Inverter recognizes that the safe stop signal is given, and shuts off the output. Refer to "Safe Stop" on page 4-32.
			OFF	Inverter operates normal
255	-	(No function)	ON	(input ignored)
			OFF	(input ignored)

NOTE: When using the Multi-speed Select settings CF1 to CF4, do not display parameter F001 or change the value of F001 while the inverter is in Run Mode (motor running). If it is necessary to check the value of F001 during Run Mode, lease monitor D001 instead of F001.

HIGH VOLTAGE: When set RDY function ON, there will be a voltage appears at motor output terminals U, V and W even if the motor is in stop mode. So never touch the inverter power terminals even the motor is not running.

NOTE: The EMR is not programmable, but will be assigned automatically when the hardware switch S8 is made ON. When the EMR is assigned, function assignments of terminal 3, 4 and 5 are automatically changed as follows. Please also refer to Safe Stop paragraph in section 4-32.

Terminal Number	Default setting Safe Stop switch S8 = OFF	Emergency Stop switch condition	
		Safe Stop switch S8 = **ON**	Safe Stop switch S8 = **ON → OFF**
1	**FW**	**FW**	**FW**
2	**RV**	**RV**	**RV**
3	**CF1**	**EMR** [HW based for 1b input]	- (No func.)
4	**CF2** [US ver. :**USP**]	**RS** [HW based for 1a input]	**RS** [Normal 1a]
5	**RS** (PTC assignable)	- (No func.)	- (No func.)

Output Terminal Configuration

The inverter provides configuration for logic (discrete) and analog outputs, shown in the table below.

"C" Function			Run Mode Edit	Defaults		
Func. Code	Name / SRW Display	Description		-FE2 (EU)	-FU2 (USA)	Units
C021	Terminal [11] function **OUT-TM 11 FA1**	12 programmable functions available for logic (discrete) outputs (see next section)	✕	01 [FA1]	01 [FA1]	–
C026	Alarm relay terminal function **OUT-TM RY AL**	12 programmable functions available for logic (discrete) outputs (see next section)	✕	05 [AL]	05 [AL]	–
C028	AM signal selection **AM-KIND F**	Two available functions: 00…motor speed 01…motor current (see after next section)	✕	00 [freq]	00 [freq]	

The output logic conversion is programmable for terminal [11] and the alarm relay terminal. The open-collector output terminal [11] defaults to normally open (active low), but you can select normally closed (active high) for the terminal in order to invert the sense of the logic. You can invert the logical sense of the alarm relay output as well.

"C" Function			Run Mode Edit	Defaults		
Func. Code	Name / SRW Display	Description		-FE2 (EU)	-FU2 (USA)	Units
C031	Terminal [11] active state **O/C-11 NO**	Select logic conversion, two option codes: 00…normally open [NO] 01…normally closed [NC]	✕	00	00	–
C036	Alarm relay active state **O/C-RY NC**	Select logic conversion, two option codes: 00…normally open [NO] 01…normally closed [NC]	✕	01	01	–

Output Function Summary Table – This table shows all twelve functions for the logical outputs (terminals [11] and [AL]) at a glance. Detailed descriptions of these functions, related parameters and settings, and example wiring diagrams are in "Using Intelligent Output Terminals" on page 4-34.

Output Function Summary Table				
Option Code	Terminal Symbol	Function Name	Description	
00	RUN	Run Signal	ON	When the inverter is in Run Mode
			OFF	When the inverter is in Stop Mode
01	FA1	Frequency Arrival Type 1–Constant Speed	ON	When output to motor is at the set frequency
			OFF	When output to motor is OFF, or in any acceleration or deceleration ramp
02	FA2	Frequency Arrival Type 2–Over frequency	ON	When output to motor is at or above the set frequency, even if in accel. or decel rams
			OFF	When output to motor is OFF, or at a level below the set frequency
03	OL	Overload Advance Notice Signal	ON	When output current is more than the set threshold for the overload signal
			OFF	When output current is less than the set threshold for the deviation signal
04	OD	Output Deviation for PID Control	ON	When PID error is more than the set threshold for the deviation signal
			OFF	When PID error is less than the set threshold for the deviation signal
05	AL	Alarm Signal	ON	When an alarm signal has occurred and has not been cleared
			OFF	When no alarm has occurred since the last cleaning of alarm(s)
06	Dc	Analog Input Disconnect Detect	ON	When the [O] input value < B082 setting (signal loss detected), or the [OI] input current < 4mA
			OFF	When no signal loss is detected
07	FBV	PID Second Stage Output	ON	Transitions to ON when the inverter is in RUN Mode and the PID Process Variable (PV) is less than the Feedback Low Limit (C053)
			OFF	Transitions to OFF when the PID Process Variable (PV) exceeds the PID High Limit (C052), and transitions to OFF when the inverter goes from Run Mode to Stop Mode
08	NDc	Network Detection Signal	ON	When the communications watchdog timer (period specified by C077) has time out
			OFF	When the communications watchdog timer is satisfied by regular communications activity
09	LOG	Logic Output Function	ON	When the Boolean operation specified by C143 has a logical "1" result
			OFF	When the Boolean operation specified by C143 has a logical "0" result
10	ODc	Communication option error	ON	No communication between communication option is detected during a time set in P044
			OFF	Communication is normal
43	LOC	Low load detection	ON	Motor current is less than the set value of C039
			OFF	Motor current is not less than the set value of C039

Analog Function Summary Table – This table shows both functions for the analog voltage output [AM] terminal, configured by C028. More information on using and calibrating the [AM] output terminal is in "Analog Output Operation" on page 4-55.

Analog Function Summary Table			
Option Code	Function Name	Description	Range
00	Analog Frequency Monitor	Inverter output frequency.	0 to max. frequency in Hz
01	Analog Current Output Monitor	Motor current (% of maximum rated output current)	0 to 200%

Low Load Detection Parameters

The following parameters work in conjunction with the intelligent output function, when configured. The output mode parameter (C038) sets the mode of the detection at which the low load detection signal [LOC] turns ON. Three kinds of modes can be selected. The detection level parameter (C039) is to set the level of the low load.

This function is for generating an early warning logic output, without causing either a trip event or a restriction of the motor current (those effects are available on other functions).

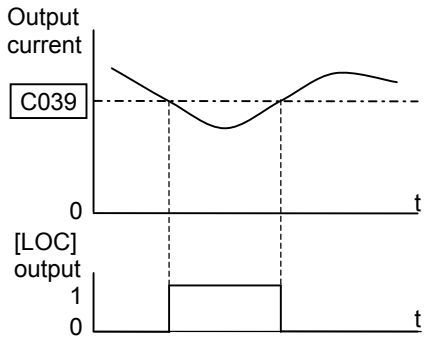

"C" Function			Run Mode Edit	Defaults		
Func. Code	Name / SRW Display	Description		-FE2 (EU)	-FU2 (USA)	Units
C038	Output mode of low load detection signal **LOC MODE CRT**	Two option codes: 00…During acceleration, deceleration and constant speed 01…During constant speed only	✕	01	01	–
C039	Low load detection level **LOC LVL 02.60A**	Set the level of low load detection, range is 0.0 to 2.0*inverter rated current	✕	INV rated curr.	INV rated curr.	A

Output Function Adjustment Parameters

The following parameters work in conjunction with the intelligent output function, when configured. The overload level parameter (C041) sets the motor current level at which the overload signal [OL] turns ON. The range of setting is from 0% to 200% of the rated current for the inverter. This function is for generating an early warning logic output, without causing either a trip event or a restriction of the motor current (those effects are available on other functions).

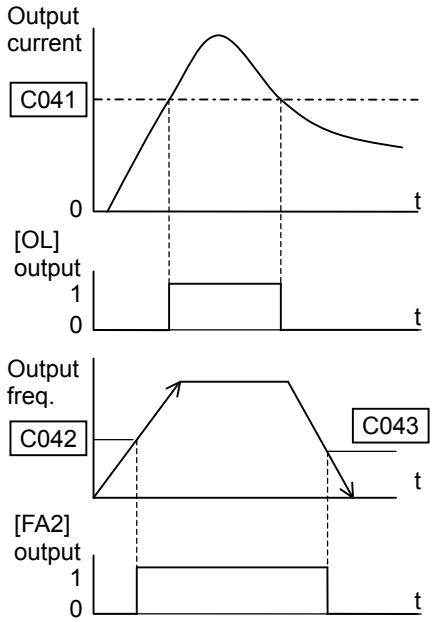

The frequency arrival signal, [FA1] or [FA2], is intended to indicate when the inverter output has reached (arrived at) the target frequency. You can adjust the timing of the leading and trailing edges of the signal via two parameters specified to acceleration ad deceleration ramps, C042 and C043.

The Error for the PID loop is the magnitude (absolute value) of the difference between the Set point (desired value) and Process Variable (actual value). The PID output deviation signal [OD] (output terminal function option code 04) indicates when the error magnitude has exceeded a magnitude you define.

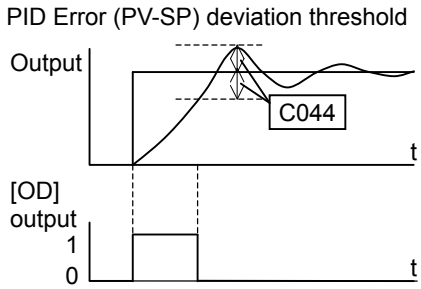

"C" Function			Run Mode Edit	Defaults		
Func. Code	Name / SRW Display	Description		-FE2 (EU)	-FU2 (USA)	Units
C041	Overload level setting OV LVL 001.60A	Sets the overload signal level between 0% and 200% (from 0 to two time the rated current of the inverter)	✕	Rated current for each inverter model		A
C241	Overload level setting, 2nd motor 2OV LVL 001.60A	Sets the overload signal level between 0% and 200% (from 0 to two time the rated current of the inverter)	✕	Rated current for each inverter model		A
C042	Frequency arrival setting for acceleration ARV ACC 0000.0Hz	Sets the frequency arrival setting threshold for the output frequency during acceleration, range is 0.0 to 400.0 Hz	✕	0.0	0.0	Hz
C043	Frequency arrival setting for deceleration ARV DEC 0000.0Hz	Sets the frequency arrival setting threshold for the output frequency during deceleration, range is 0.0 to 400.0 Hz	✕	0.0	0.0	Hz
C044	PID deviation level setting ARV PID 003.0%	Sets the allowable PID loop error magnitude (absolute value), SP-PV, range is 0.0 to 100%	✕	3.0	3.0	%
C052	PID FBV function high limit PID LtU 0100.0%	When the PV exceeds this value, the PID loop turns OFF the PID second stage output, range is 0.0 to 100%	✕	100.0	100.0	%
C053	PID FBV function variable low limit PID LtL 0000.0%	When the PV goes below this value, the PID loop turns ON the PID second stage output, range is 0.0 to 100%	✕	0.0	0.0	%

Network Communications Settings

The following table lists parameters that configure the inverter's serial communications port. The settings affect how the inverter communication with a digital operator (such as SRW-0EX), as well as a ModBus network (for networked inverter applications). The settings cannot be edited via the network, in order to ensure network reliability. Refer to "ModBus Network Communications" on page B-1 for more information on controlling any monitoring your inverter from a network.

"C" Function			Run Mode Edit	Defaults		
Func. Code	Name / SRW Display	Description		-FE2 (EU)	-FU2 (USA)	Units
C070	Selection of OPE / ModBus **PARAM REM**	Two option codes: 02…OPE or option 03…ModBus (485)	✕	02	02	–
C071	Communication speed selection **COM BAU 4800**	Three option codes: 04…4800 bps 05…9600 bps 06…19200 bps	✕	06	04	baud
C072	Node allocation **COM ADR 00001**	Set the address of the inverter on the network. Range is 1 to 32	✕	1.	1.	–
C074	Communication parity selection **COM PRTY NON**	Three option codes: 00…No parity 01…Even parity 02…Odd parity	✕	00	00	–
C075	Communication stop bit selection **COM STP 1BIT**	Range is 1 to 2	✕	1	1	bit
C076	Communication error select **COM ESlct None**	Selects inverter response to communications error. Five options: 00…Trip (Error code E60) 01…Decelerate to a stop and trip (Error code E60) 02…Disable 03…Free run stop (coasting) 04…Decelerate to a stop	✕	02	02	–
C077	Communication error time-out **COM ETIM 000.00s**	Sets the communications watchdog timer period. Range is 0.00 to 99.99 sec	✕	0.00	0.00	sec.
C078	Communication wait time **COM Wait 00000ms**	Time the inverter waits after receiving a message before it transmits. Range is 0. to 1000. ms	✕	0.	0.	msec.

Analog Signal Calibration Settings

The functions in the following table configure the signals for the analog input terminals. Note that these settings do not change the current/voltage or sink/source characteristics – only the zero and span (scaling) of the signals.

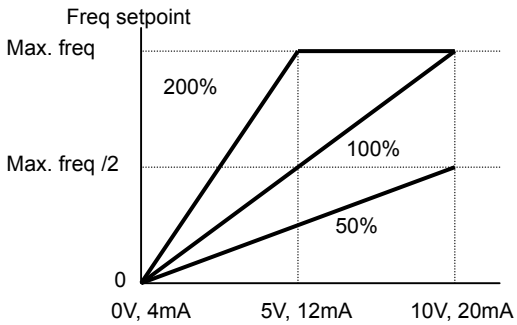

"C" Function			Run Mode Edit	Defaults		
Func. Code	Name / SRW Display	Description		-FE2 (EU)	-FU2 (USA)	Units
C081	O input span calibration **O-ADJ 0100.0%**	Scale factor between the external frequency command on terminals L–O (voltage input) and the frequency output, range is 0.0 to 200%	✓	100.0	100.0	%
C082	OI input span calibration **OI-ADJ 0100.0%**	Scale factor between the external frequency command on terminals L–OI (voltage input) and the frequency output, range is 0.0 to 200%	✓	100.0	100.0	%
C086	AM offset calibration **AM OFFST 0000.0V**	Offset adjustment of AM output. Range is 0.0 to 10.0 Adjust together with B080 (AM gain adjustment) - See page 3-40, 4-55 for details.	✓	0.0	0.0	V

NOTE: When you restore factory default settings, the values will change to those listed above. Be sure to manually reconfigure the values for your application, if needed, after restoring factory defaults.

Miscellaneous Functions

The following table contains miscellaneous functions not in other function groups.

"C" Function			Run Mode Edit	Defaults		
Func. Code	Name / SRW Display	Description		-FE2 (EU)	-FU2 (USA)	Units
C091	Debug mode enable * **DBG Slct OFF**	Displays debug parameters. Two option codes: 00…Disable 01…Enable **<Do not set>** (for factory use)	✓	00	00	–
C101	Up/Down memory mode selection **UP/DWN NO-STR**	Controls speed setpoint for the inverter after power sycle. Two option codes: 00…Clear last frequency (return to default frequency F001) 01…Keep last frequency adjusted by UP/DWN	✗	00	00	–
C102	Reset selection **RS Slct ON**	Determines response to Reset input [RS]. Three option codes: 00…Cancel trip state at input signal ON transition, stops inverter if in Run Mode 01…Cancel trip state at signal OFF transition, stops inverter if in Run Mode 02…Cancel trip state at input ON transition, no effect if in Run Mode	✗	00	00	–

CAUTION: Do not change Debug mode for safety reasons. Otherwise unexpected performances may occur.

Output Logic and Timing

Logic Output Function – The inverter has a built-in logic output feature. You can select any two of the other nine intelligent output options for internal inputs. Then, configure the logic function to apply the logical AND, OR, or XOR (exclusive OR) operates as desired to the two inputs. The terminal symbol for the new output is [LOG]. Use C021, or C026 to route the logical result to terminal [11] or the relay terminals.

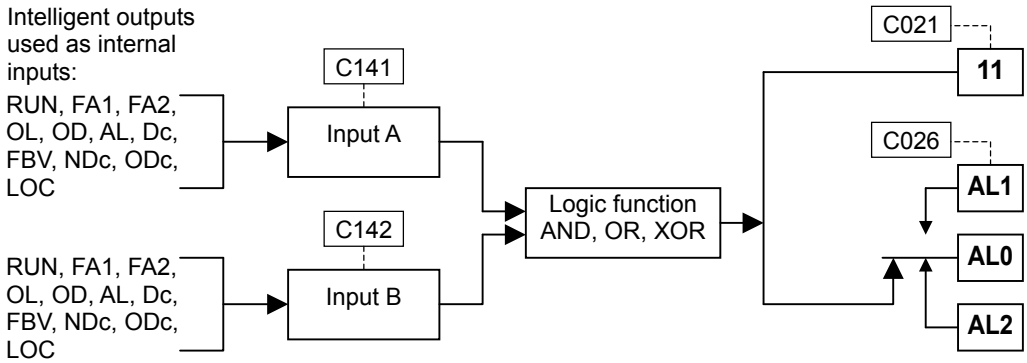

The following table shows all four possible input combinations with each of the three available logic operations.

Input Status		[LOG] Output State		
A	B	AND	OR	XOR
0	0	0	0	0
0	1	0	1	1
1	0	0	1	1
1	1	1	1	0

"C" Function			Run Mode Edit	Defaults		
Func. Code	Name / SRW Display	Description		-FE2 (EU)	-FU2 (USA)	Units
C141	Input A select for logic output **LogicOut1 RUN**	11 programmable functions available for logic (discrete) outputs 00…RUN 01…FA1 02…FA2 03…OL 04…OD 05…AL 06…Dc 07…FBV 08…NDc 09…LOG 10…ODc 43…LOC	✕	00	00	–
C142	Input B select for logic output **LogicOut2 FA1**		✕	01	01	–
C143	Logic function select **LogicOPE AND**	Applies a logic function to calculate [LOG] output state, Three options: 00…[LOG] = A AND B 01…[LOG] = A OR B 02…[LOG] = A XOR B	✕	00	00	–

Output Signal ON/OFF Delay Function – Intelligent outputs including terminals [11] and the output relay, have configurable signal transition delays. Each output can delay either the OFF-to-ON or ON-to-OFF transitions, or both. Signal transition delays are variable from 0.1 to 100.0 seconds. This feature is useful in applications that must tailor inverter output signals to meet timing requirements of certain external devices.

"C" Function			Run Mode Edit	Defaults		
Func. Code	Name / SRW Display	Description		-FE2 (EU)	-FU2 (USA)	Units
C144	Terminal [11] ON delay **DLAY 11 000.0s**	Range is 0.0 to 100.0 sec.	✕	0.0	0.0	sec.
C145	Terminal [11] OFF delay **HOLD 11 000.0s**	Range is 0.0 to 100.0 sec.	✕	0.0	0.0	sec.
C148	Output relay ON delay **DLAY RY 000.0s**	Range is 0.0 to 100.0 sec.	✕	0.0	0.0	sec.
C149	Output relay OFF delay **HOLD RY 000.0s**	Range is 0.0 to 100.0 sec.	✕	0.0	0.0	sec.

NOTE: If you are using the output terminal OFF delay feature (any of C145, C149 > 0.0 sec.), the [RS] (reset) terminal affects the ON-to-OFF transition slightly. Normally (with using OFF delays), the [RS] input causes the motor output and the logic outputs to turn OFF together, immediately. However, when any output uses an OFF delay, then after the [RS] input turns ON, that output will remain ON for an additional 1 sec. period (approximate) before turning OFF.

"H" Group: Motor Constants Functions

The "H" Group parameters configure the inverter for the motor characteristics. You must manually set H003 and H004 values to match the motor. Parameter H006 is factory-set. If you want to reset the parameters to the factory default settings, use the procedure in "Restoring Factory Default Settings" on page 6-8. Use A044 to select the torque control algorithm as shown in the diagram.

Inverter Torque Control Algorithms

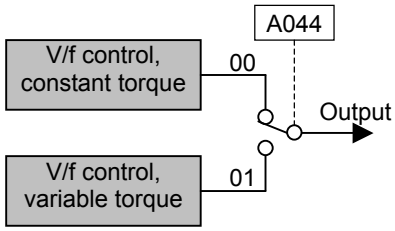

"H" Function			Run Mode Edit	Defaults		
Func. Code	Name / SRW Display	Description		-FE2 (EU)	-FU2 (USA)	Units
H003	Motor capacity **AUX K 0.4 kW**	Ten selections: 0.2/0.4/0.55/0.75/1.1/1.5/2.2/3.7/ 5.5/7.5	✗	Specified by the capacity of each inverter model		kW
H203	Motor capacity, 2nd motor **2AUXK 0.4 kW**	Ten selections: 0.2/0.4/0.55/0.75/1.1/1.5/2.2/3.7/ 5.5/7.5	✗			kW
H004	Motor poles setting **AUX P 4p**	Four selections: 2 / 4 / 6 / 8	✗	4	4	poles
H204	Motor poles setting, 2nd motor **2AUXP 4p**	Four selections: 2 / 4 / 6 / 8	✗	4	4	poles
H006	Motor stabilization constant **AUX KCD 100**	Motor constant (factory set), range is 0 to 255	✓	100	100	–
H206	Motor stabilization constant, 2nd motor **2AUXKCD 100**	Motor constant (factory set), range is 0 to 255	✓	100	100	–

CALL NOW 800-985-6929 http://www.automatedpt.com Email: charles@aut

Operations and Monitoring

4

In This Chapter… page

- Introduction 2
- Connecting to PLCs and Other Devices 4
- Control Logic Signal Specifications 6
- Intelligent Terminal Listing 7
- Using Intelligent Input Terminals 8
- Using Intelligent Output Terminals 36
- Analog Input Operation 55
- Analog Output Operation 57
- PID Loop Operation 58
- Configuring the Inverter for Multiple Motors 60

CALL NOW 800-985-6929 http://www.automatedpt.com Email: charles@automatedpt.com

Introduction

The previous material in Chapter 3 gave a reference listing of all the programmable functions of the inverter. We suggest that you first scan through the listing of inverter functions to fain a general familiarity. This chapter will build on that knowledge in the following ways:

1. Related functions – Some parameters interact with or depend on the settings in other functions. This chapter lists "required settings" for a programmable function to serve as a cross-reference and an aid in showing how function interacts.

2. Intelligent terminals – Some functions rely on an input signal on a control logic connector terminal, or generate output signals in other cases.

3. Electrical interfaces – This chapter shows how to make connections between the inverter and other electrical devices.

4. PID Loop Operation – The X2002 has a built-in PID loop that calculates the optimal inverter output frequency to control an external process. This chapter shows the parameters and input/output terminals associated with PID loop operation.

5. Multiple motors – A single X2002 inverter may be used with two or more motors in some types of applications. This chapter shows the electrical connections and inverter parameters involved in multiple-motor applications.

The topics in this chapter can help you decide the features that are important to your application, and how to use them. The basic installation covered in Chapter 2 concluded with the powerup test and running the motor. Now, this chapter starts from that point and shows how to make the inverter part of a larger control or automation system.

Caution Messages for Operating Procedures

Before continuing, please read the following Caution messages.

CAUTION: The heat sink fins will have a high temperature. Be careful not to touch them. Otherwise, there is the danger of getting burned.

CAUTION: The operation of the inverter can be easily changed from low speed to high speed. Be sure to check the capability and limitations of the motor and machine before operating the inverter. Otherwise, it may cause injury to personnel.

CAUTION: If you operate a motor at a frequency higher than the inverter standard default setting (50Hz/60Hz), be sure to check the motor and machine specifications with the respective manufacturer. Only operate the motor at elevated frequencies after getting their approval. Otherwise, there is the danger of equipment damage.

Warning Messages for Operating Procedures

WARNING: Be sure to turn ON the input power supply only after closing the front case. While the inverter is energized, be sure not to open the front case. Otherwise, there is the danger of electric shock.

WARNING: Be sure not to operate electrical equipment with wet hands. Otherwise, there is the danger of electric shock.

WARNING: While the inverter is energized, be sure not to touch the inverter terminals even when the motor is stopped. Otherwise, there is the danger of electric shock.

WARNING: If the retry mode is selected, the motor may suddenly restart after a trip stop. Be sure to stop the inverter before approaching the machine (be sure to design the machine so that safety for personnel is secure even if it restarts.) Otherwise, it may cause injury to personnel.

WARNING: If the power supply is cut OFF for a short period of time, the inverter may restart operating after the power supply recovers if the Run command is active. If a restart may pose danger to personnel, so be sure to use a lock-out circuit so that it will not restart after power recovery. Otherwise, it may cause injury to personnel.

WARNING: The Stop Key is effective only when the stop function is enabled. Be sure to enable the Stop Key separately from the emergency stop. Otherwise, it may cause injury to personnel.

WARNING: During a trip event, if the alarm reset is applied and the Run command is present, the inverter will automatically restart. Be sure to apply the alarm reset only after verifying the Run command is OFF. Otherwise, it may cause injury to personnel.

WARNING: Be sure not to touch the inside of the energized inverter or to put any conductive object into it. Otherwise, there is a danger of electric shock and/or fire.

WARNING: If power is turned ON when the Run command is already active, the motor will automatically start and injury may result. Before turning ON the power, confirm that the RUN command is not present.

WARNING: When the Stop key function is disabled, pressing the Stop key does not stop the inverter, nor will it reset a trip alarm.

WARNING: Be sure to provide a separate, hard-wired emergency stop switch when the application warrants it.

Connecting to PLCs and Other Devices

Hitachi inverters (drives) are useful in many types of applications. During installation, the inverter keypad (or other programming device) will facilitate the initial configuration. After installation, the inverter will generally receive its control commands through the control logic connector or serial interface from another controlling device. In a simple application such as single-conveyor speed control, a Run/Stop switch and potentiometer will give the operator all the required control. In a sophisticated application, you may have a *programmable logic controller* (PLC) as the system controller, with several connections to the inverter.

It is not possible to cover all the possible types of application in this manual. It will be necessary for you to know the electrical characteristics of the devices you want to connect to the inverter. Then, this section and the following sections on I/O terminal functions can help you quickly and safely connect those devices to the inverter.

CAUTION: It is possible to damage the inverter or other devices if your application exceeds the maximum current or voltage characteristics of a connection point.

The connections between the inverter and other devices rely on the electrical input/output characteristics at both ends of each connection, shown in the diagram to the right. The inverter's configurable inputs accept either a sourcing or sinking output from an external device (such as PLC). This chapter shows the inverter's internal electrical component(s) at each I/O terminal. In some cases, you will need to insert a power source in the interface wiring.

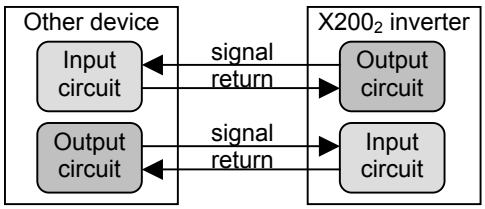

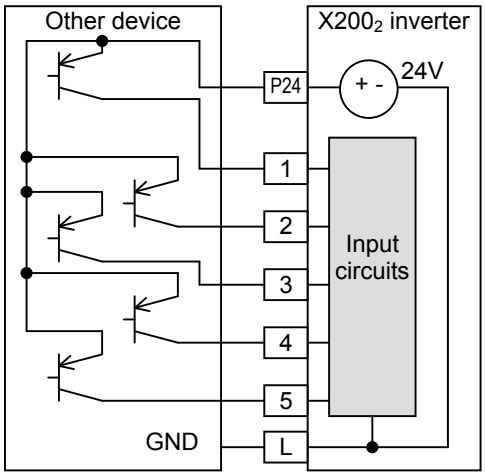

In order to avoid equipment damage and get your application running smoothly, we recommend drawing a schematic of each connection between the inverter and the other device. Include the internal components of each device in the schematic, so that it makes a complete circuit loop.

After making the schematic, then:

1. Verify that the current and voltage for each connection is within the operating limits of each device.
2. Make sure that the logic sense (active high or active low) of any ON/OFF connection is correct.
3. Check the zero and span (curve end points) for analog connections, and be sure the scale factor from input to output is correct.
4. Understand what will happen at the system level if any particular device suddenly loses power, or powers up after other devices.

Example Wiring Diagram

The schematic diagram below provides a general example of logic connector wiring, in addition to basic power and motor wiring converted in Chapter 2. The goal of this chapter is to help you determine the proper connections for the various terminals shown below for your application needs.

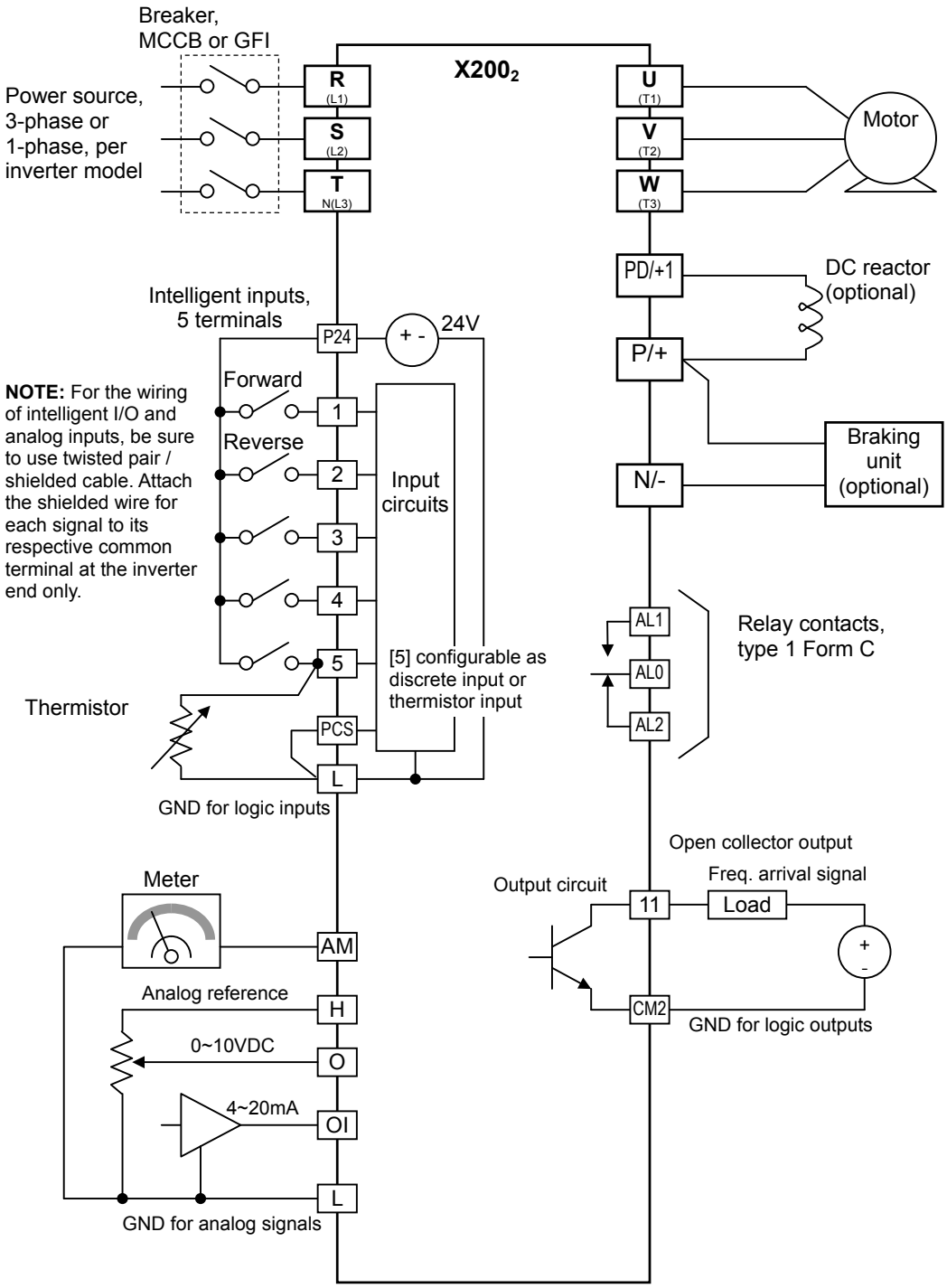

Control Logic Signal Specifications

The control logic connectors are located just behind the front housing cover. The relay contacts are just to the left of the logic connectors. Connector labeling is shown below.

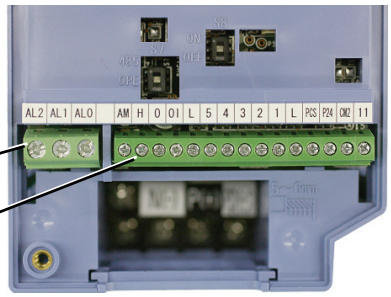

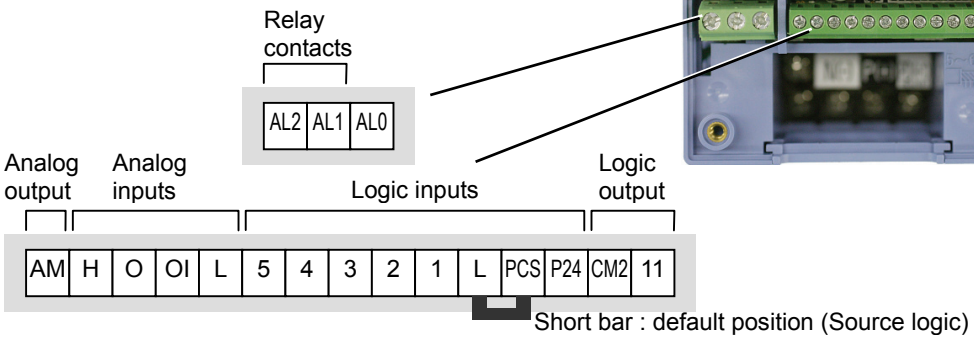

Terminal Name	Description	Ratings
[P24]	+24V for logic inputs	24VDC, 30mA. (do not short to terminal L)
[PCS]	Intelligent input common	Factory set: Source type for –FE2 and –FU2 models (connecting [P24] to [1]~[5] turns each input ON). To change to sink type, remove the short wire between [PCS] and [L], and connect it between [P24] and [L]. In this case, connecting [L] to [1]~[5] makes each input ON.
[1], [2], [3], [4], [5]	Discrete logic inputs	27VDC max. (use PCS or an external supply referenced to terminal L)
[L] (right) *1	GND for logic inputs	Sum of input [1]~[5] currents (return)
[11]	Discrete logic output	50mA max. ON state current, 27 VDC max. OFF state voltage
[CM2]	GND for logic output	100 mA: [11] current return
[AM]	Analog voltage output	0~10VDC 1mA maximum
[L] (left) *2	GND for analog signals	Sum of [OI], [O], and [H] currents (return)
[OI]	Analog input, current	4 to 19.6 mA range, 20 mA nominal, input impedance 250 Ω
[O]	Analog input, voltage	0 to 9.8 VDC range, 10 VDC nominal, input impedance 10 kΩ
[H]	+10V analog reference	10VDC nominal, 10mA max.
[AL0]	Relay common contact	250VAC, 2.5A (R load) max. 250VAC, 0.2A (I load, P.F.=0.4) max. 100VAC, 10mA min. 30VDC, 3.0A (R load) max. 30VDC, 0.7A (I load, P.F.=0.4) max. 5VDC, 100mA min.
[AL1] *3	Relay contact, normally open	
[AL2] *3	Relay contact, normally closed	

Note 1: The two terminals [L] are electrically connected together inside the inverter.
Note 2: We recommend using [L] logic GND (to the right) for logic input circuits and [L] analog GND (to the left) for analog I/O circuits.
Note 3: Default relay N.O./N.C. configuration is reversed. See page 4-35.

Intelligent Terminal Listing

Intelligent Inputs

Use the following table to locate pages for intelligent input material in this chapter.

Input Function Summary Table			
Symbol	Code	Function Name	Page
FW	00	FORWARD Run/Stop	4-11
RV	01	Reverse Run/Stop	4-11
CF1	02	Multi-speed Select, Bit 0 (LSB)	4-12
CF2	03	Multi-speed Select, Bit 1	4-12
CF3	04	Multi-speed Select, Bit 2	4-12
CF4	05	Multi-speed Select, Bit 3 (MSB)	4-12
JG	06	Jogging	4-14
DB	07	External DC braking	4-15
SET	08	Set (select) 2nd Motor Data	4-16
2CH	09	2-stage Acceleration and Deceleration	4-17
FRS	11	Free-run Stop	4-18
EXT	12	External Trip	4-19
USP	13	Unattended Start Protection	4-20
SFT	15	Software Lock	4-21
AT	16	Analog Input Voltage/Current Select	4-22
RS	18	Reset Inverter	4-23
PTC	19	PTC thermistor Thermal Protection	4-24
STA	20	Start (3-wire interface)	4-25
STP	21	Stop (3-wire interface)	4-25
F/R	22	FWD, REV (3-wire interface)	4-25
PID	23	PID Disable	4-26
PIDC	24	PID Reset	4-26
UP	27	Remote Control UP Function	4-27
DWN	28	Remote Control Down Function	4-27
UDC	29	Remote Control Data Clearing	4-27
OPE	31	Operator Control	4-29
ADD	50	ADD frequency enable	4-30
F-TM	51	Force Terminal Mode	4-31
RDY	52	Inverter ready	4-31
SP-SET	53	Special Set	4-16
EMR	64	Emergency Stop	4-32
NO	255	No assign	-

Intelligent Outputs

Use the following table to locate pages for intelligent output material in this chapter.

Input Function Summary Table			
Symbol	Code	Function Name	Page
00	RUN	Run Signal	4-39
01	FA1	Frequency Arrival Type 1–Constant Speed	4-40
02	FA2	Frequency Arrival Type 2–Over frequency	4-40
03	OL	Overload Advance Notice Signal	4-42
04	OD	Output Deviation for PID Control	4-43
05	AL	Alarm Signal	4-44
06	Dc	Analog Input Disconnect Detect	4-46
07	FBV	PID Second Stage Output	4-47
08	NDc	Network Detection Signal	4-50
09	LOG	Logic Output Function	4-52
10	ODc	Network error detection	4-53
43	LOC	Low load detection signal	4-54

Using Intelligent Input Terminals

Terminals [1], [2], [3], [4], and [5] are identical, programmable inputs for general use. The input circuits can use the inverter's internal (isolated) +24V field supply or an external power supply. This section describes input circuits operation and how to connect them properly to switches or transistor outputs on field devices.

The X200₂ inverter features selectable *sinking* or *sourcing* inputs. These terms refer to the connection to the external switching device–it either *sinks* current (from the input to GND) or *sources* current (from a power source) into the input. Note that the sink/source naming convention may be different in your particular country or industry. In any case, just follow the wiring diagrams in this section for your application.

The inverter has a short bar (jumper) for configuring the choice of sinking or sourcing inputs. To access it, you must remove the front cover of the inverter housing. In the figure to the top right, the short bar is shown as attached to the logic terminal block (connector). For EU and US version (suffix –xFE, and –xFU), it is originally located as source type logic. If you need to change to the sink type connection, remove the short bar and connect it as shown in the figure at the bottom right.

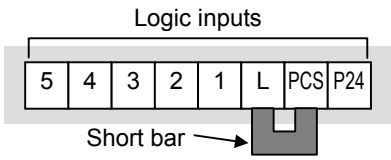

Source logic connection

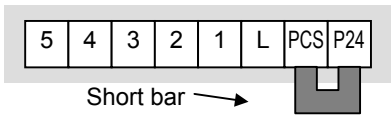

Sink logic connection

CAUTION: Be sure to turn OFF power to the inverter before changing the short circuit bar position. Otherwise, damage to the inverter circuitry may occur.

[PCS] Terminal Wiring – The [PCS] terminal (Programmable Logic Control terminal) is named to include various devices that can connect to the inverter's logic inputs. In the figure to the right, note the [PCS] terminal and the short bar (jumper). Locating the short bar between [PCS] and [L] sets the input logic source type, which is the default setting for EU and US versions. In this case, you connect input terminal to [P24] to make it active. If instead you locate the short bar between [PCS] and [P24], the input logic will be sink type. In this case, you connect the input terminal to [L] to make it active.

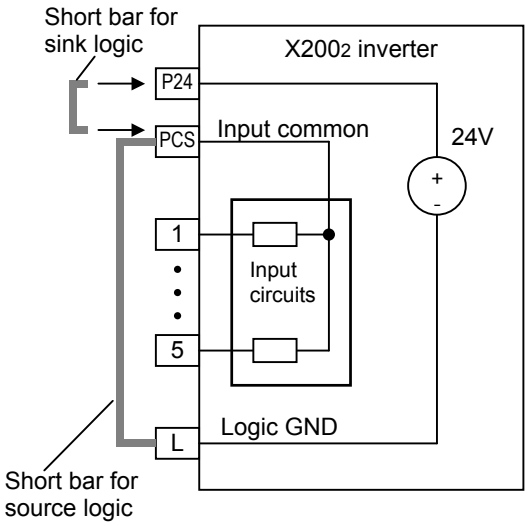

The wiring diagram on the following pages show the four combinations of using sourcing or sinking inputs, and using the internal or an external DC supply.

The two diagrams below input wiring circuits using the inverter's internal +24V supply. Each diagram shows the connection for simple switches, or for a field device with transistor outputs. Note that in the lower diagram, it is necessary to connect terminal [L] only when using the field device with transistors. Be sure to use the correct connection of the short bar shown for each wiring diagram.

Sinking Inputs, Internal Supply

Short bar = [PCS] – [P24] position

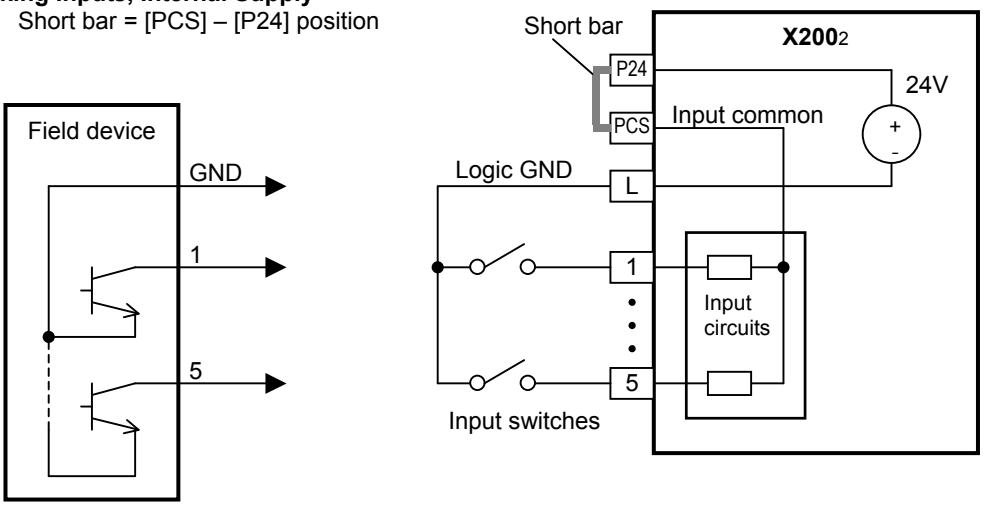

Open collector outputs,
NPN transistors

Sourcing Inputs, Internal Supply

Short bar = [PCS] – [L] position

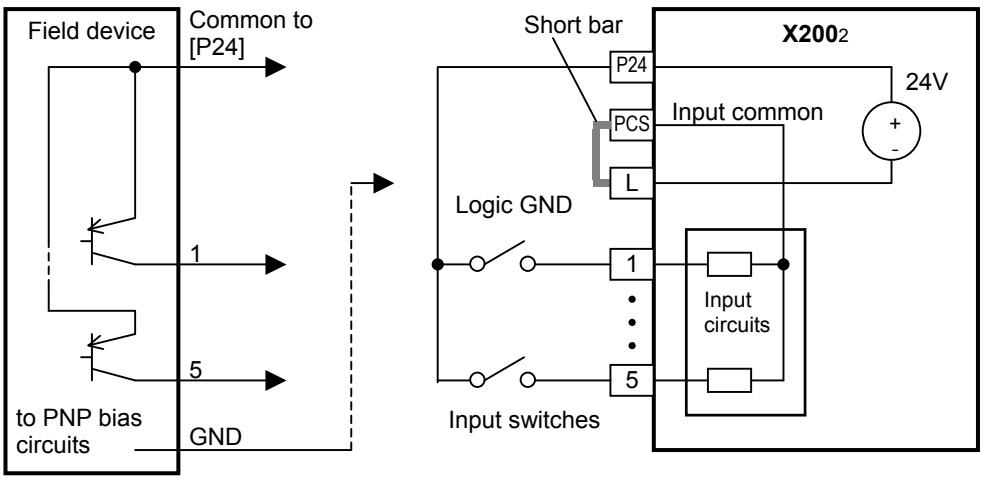

PNP transistor
sousing outputs

The two diagrams below show input wiring circuits using an external supply. If using the "Sinking Inputs, External Supply" in below wiring diagram, be sure to remove the short bar, and use a diode (*) with the external supply. This will prevent a power supply contention in case the short bar is accidentally placed in the incorrect position. For the "Sourcing Inputs, External Supply", please connect the short bar as drawn in the diagram below.

Sinking Inputs, External Supply
Short bar = Removed

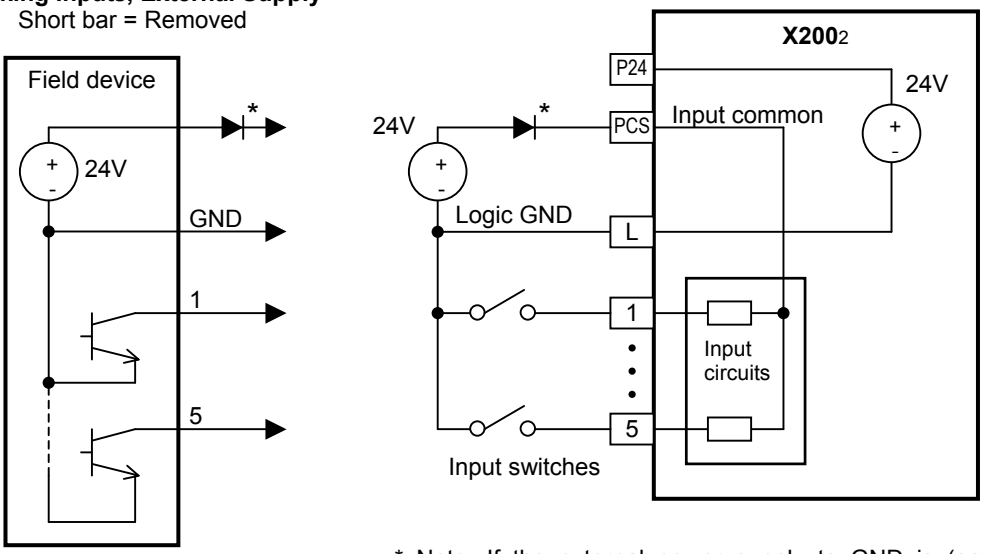

Open collector outputs, NPN transistors

* Note: If the external power supply to GND is (optionally) connected to [L], then install the above diode.

Sourcing Inputs, External Supply
Short bar = [PCS] – [L]

PNP transistor sourcing outputs

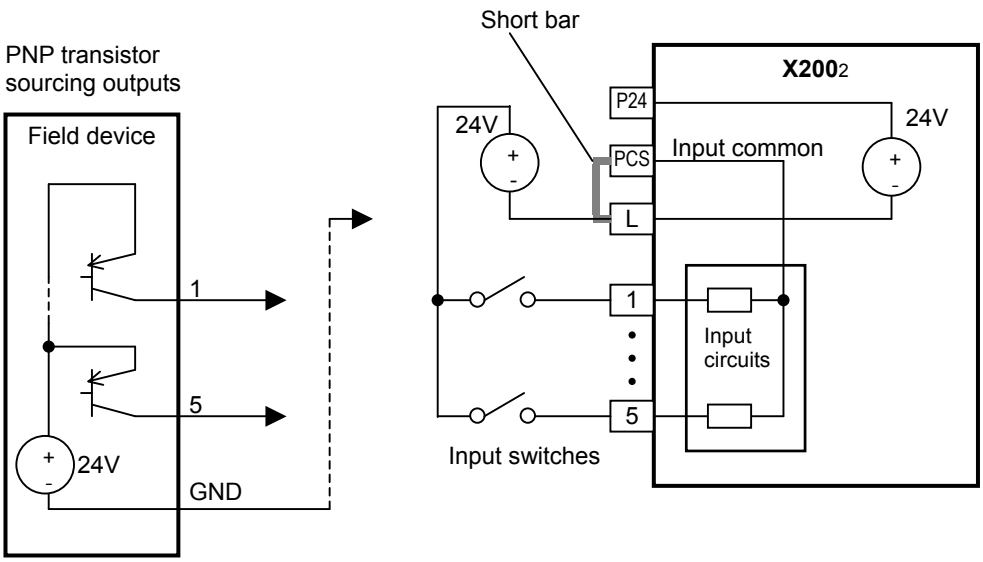

Forward Run/Stop and Reverse Run/Stop Commands:

When you input the Run command via the terminal [FW], the inverter executes the Forward Run command (high) or Stop command (low). When you input the Run command via the terminal [RV], the inverter executes the Reverse Run command (high) or Stop command (low).

Option Code	Terminal Symbol	Function Name	State	Description
00	FW	Forward Run/Stop	ON	Inverter is in Run Mode, motor runs forward
			OFF	Inverter is in Stop Mode, motor stops
01	RV	Reverse Run/Stop	ON	Inverter is in Run Mode, motor runs reverse
			OFF	Inverter is in Stop Mode, motor stops

Valid for inputs:	C001~C005
Required settings	A002 = 01

Notes:

- When the Forward Run and Reverse Run commands are active at the same time, the inverter enters the Stop Mode.
- When a terminal associated with either [FW] or [RV] function is configured for *normally closed*, the motor starts rotation when that terminal is disconnected or otherwise has no input voltage.

Example (default input configuration shown – see page 3-49)

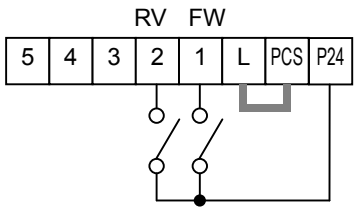

See I/O specs on page 4-6.

NOTE: The parameter F004, Keypad Run Key Routing, determines whether the single Run key issues a Run FWD command or Run REV command. However, it has no effect on the [FW] and [RV] input terminal operation.

WARNING: If the power is turned ON and the Run command is already active, the motor starts rotation and is dangerous! Before turning power ON, confirm that the Run command is not active.

Multi-Speed Select

The inverter can store up to 16 different target frequencies (speeds) that the motor output uses for steady-state run condition. These speeds are accessible through programming five of the intelligent terminals as binary-encoded inputs CF1 to CF4 per the table to the right. These can be any of the six inputs, and in any order. You can use fewer inputs if you need eight or fewer speeds.

Multi-speed	Input Function			
	CF4	CF3	CF2	CF1
Speed 0	0	0	0	0
Speed 1	0	0	0	1
Speed 2	0	0	1	0
Speed 3	0	0	1	1
Speed 4	0	1	0	0
Speed 5	0	1	0	1
Speed 6	0	1	1	0
Speed 7	0	1	1	1
Speed 8	1	0	0	0
Speed 9	1	0	0	1
Speed 10	1	0	1	0
Speed 11	1	0	1	1
Speed 12	1	1	0	0
Speed 13	1	1	0	1
Speed 14	1	1	1	0
Speed 15	1	1	1	1

NOTE: When choosing a subset of speeds to use, always start at the top of the table, and with the least-significant bit: CF1, CF2, etc.

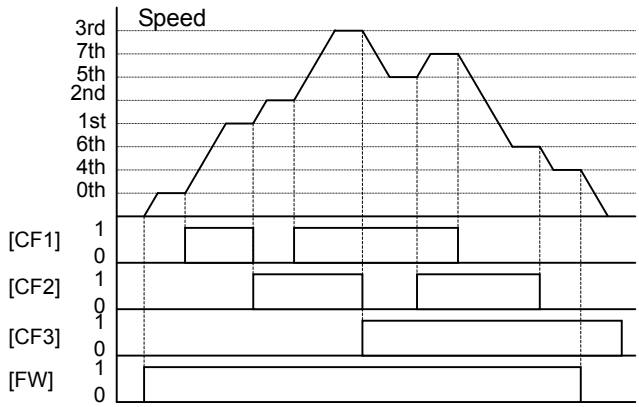

The example with eight speeds in the figure below shows how input switches configured for CF1–CF3 functions can change the motor speed in real time.

NOTE: Speed 0 is set by the A020 parameter value.

Option Code	Terminal Symbol	Function Name	State	Description
02	CF1	Multi-speed Select, Bit 0 (LSB)	ON	Binary encoded speed select, Bit 0, logical 1
			OFF	Binary encoded speed select, Bit 0, logical 0
03	CF2	Multi-speed Select, Bit 1	ON	Binary encoded speed select, Bit 1, logical 1
			OFF	Binary encoded speed select, Bit 1, logical 0
04	CF3	Multi-speed Select, Bit 2	ON	Binary encoded speed select, Bit 2, logical 1
			OFF	Binary encoded speed select, Bit 2, logical 0
05	CF4	Multi-speed Select, Bit 3 (MSB)	ON	Binary encoded speed select, Bit 3, logical 1
			OFF	Binary encoded speed select, Bit 3, logical 0

Valid for inputs:	C001~C005
Required settings	F001, A001=02, A020 to A035

Notes:

- When programming the multi-speed settings, be sure to press the Store key each time and then set the next multi-speed setting. Note that when the key is not pressed, no data will be set.
- When a multi-speed setting more than 50Hz (60Hz) is to be set, it is necessary to program the maximum frequency A004 high enough to allow that speed

Example (some CF inputs require input configuration; some are default inputs—see page 3–49):

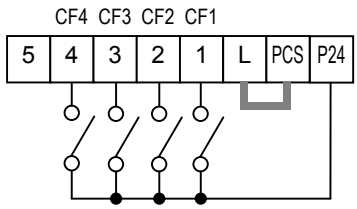

See I/O specs on page 4–6.

While using the multi-speed capability, you can monitor the present frequency with monitor function D001 during each segment of a multi-speed operation.

NOTE: When using the Multi-speed Select settings CF1 to CF4, do not display parameter F001 or change the value of F001 while the inverter is in Run Mode (motor running). If it is necessary to check the value of F001 during Run Mode, please monitor D001 instead of F001.

There are two ways to program the speeds into the registers A020 to A035:

1. Standard keypad programming:
   - a. Select each parameter A020 to A035.
   - b. Press the FUNC key to view the parameter value.
   - c. Use the ▲1 and ▼2 keys to edit the value.
   - d. Use the STR key to save the data to memory.
2. Programming using the CF switches. Set the speed by following these steps:
   - a. Turn the Run command OFF (Stop Mode).
   - b. Turn inputs ON to select desired Multi-speed. Display the value of F001 on the digital operator.
   - c. Set the desired output frequency by pressing the ▲1 and ▼2 keys.
   - d. Press the STR key once to store the set frequency. When this occurs, F001 indicates the output frequency of Multi-speed n.
   - e. Press the FUNC key once to confirm that the indication is the same as the set frequency.
   - f. Repeat operations in 2. a) to 2. e) to set the frequency of other Multi-speeds. It can be set also by parameters A020 to A035 in the first procedure 1. a) to 1. d).

Jogging Command

The Jog input [JG] is used to command the motor to rotate slowly in small increments for manual operation. The speed is limited to 10 Hz. The frequency for the jogging operation is set by parameter A038. Jogging does not use an acceleration ramp, so we recommend setting the jogging frequency A038 to 5 Hz or less to prevent tripping.

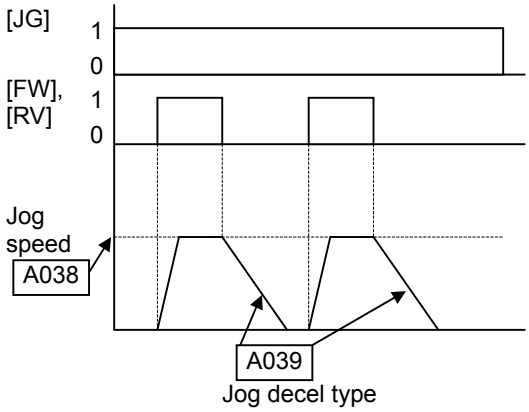

When the terminal [JG] is turned ON and the Run command is issued, the inverter outputs the programmed jog frequency to the motor. To enable the Run key on the digital operator for jog input, set the value 01 (terminal mode) in A002 (Run command source).

The type of deceleration used to end a motor jog operation is selectable by programming function A039. The options are:

- 00 Free-run stop (coasting)
- 01 Deceleration (normal level) and stop
- 02 Use DC braking and stop

Option Code	Terminal Symbol	Function Name	State	Description
06	JG	Jogging	ON	Inverter is in Run Mode, output to motor runs at jog parameter frequency
			OFF	Inverter is in Stop Mode

Valid for inputs:	C001~C005
Required settings	A002=01, A038>B082, A038>0, A039

Notes:
- No jogging operation is performed when the set value of jogging frequency A038 is smaller than the start frequency B082, or the value is 0Hz.
- Be sure to stop the motor when switching the function [JG] ON or OFF.

Example (requires input configuration—see page 3–49):

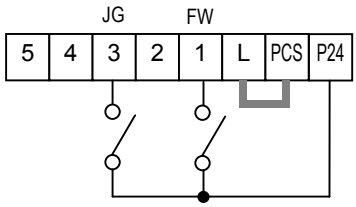

See I/O specs on page 4–6.

Operations and Monitoring

External Signal for DC Braking

When the terminal [DB] is turned ON, the DC braking feature is enabled. Set the following parameters when the external DC braking terminal [DB] is to be used:

- A053 – DC braking delay time setting. The range is 0.1 to 5.0 seconds.
- A054 – DC braking force setting. The range is 0 to 100%.

The scenarios to the right help show how DC braking works in various situations.

1. Scenario 1 – The [FW] or [RV] terminal is ON. When [DB] is ON, DC braking is applied. When [DB] is OFF again, the output frequency ramps to the prior level.
2. Scenario 2 – The Run command is applied from the operator keypad. When the [DB] terminal is ON, DC braking is applied. When the [DB] terminal is OFF again, the inverter output remains OFF.
3. Scenario 3 – The Run command is applied from the operator keypad. When the [DB] terminal is ON, DC braking is applied after the delay time set by A053 expires. The motor is in a free-running (coasting) condition. When the [DB] terminal is OFF again, the inverter output remains OFF.

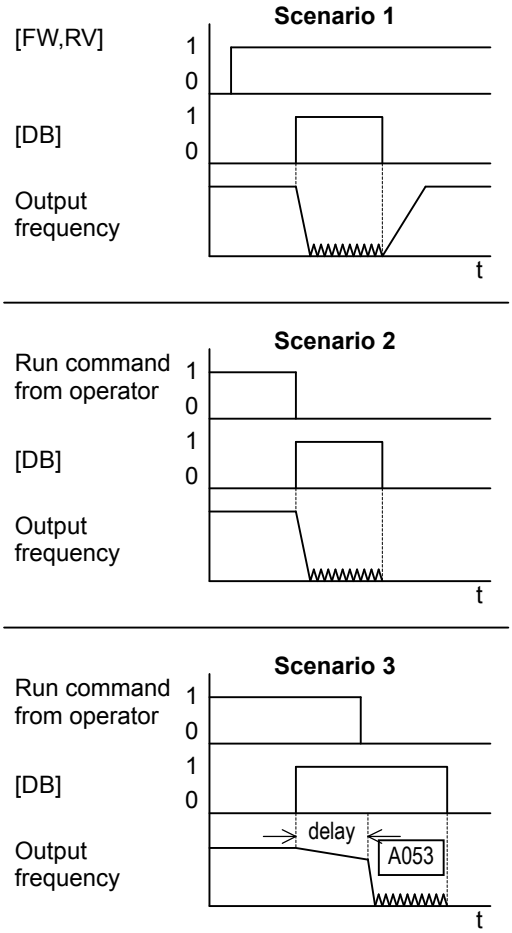

Option Code	Terminal Symbol	Function Name	State	Description
07	DB	External DC Braking	ON	Applies DC injection braking during deceleration
			OFF	Does not apply DC injection braking during deceleration

Valid for inputs:	C001~C005
Required settings	A053, A054

Notes:
- Do not use the [DB] input continuously or for a long time when the DC braking force setting A054 is high (depends on the motor application).
- Do not use the [DB] feature for continuous or high duty cycle as a holding brake. The [DB] input is designed to improve stopping performance. Use a mechanical brake for holding a stop position.

Example (requires input configuration—see page 3–49):

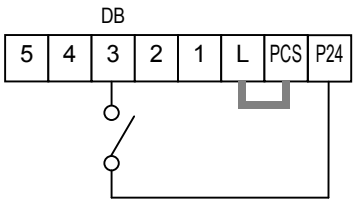

See I/O specs on page 4–6.

Set Second Motor, Special Set

If you assign the [SET] function to an intelligent input terminal, you can select between two sets of motor parameters. The second parameters store an alternate set of motor characteristics. When the terminal [SET] is turned ON, the inverter will use the second set of parameters to generate the frequency output to the motor. When changing the state of the [SET] input terminal, the change will not take effect until the inverter is stopped. Special Set [SP-SET] is for changing the second motor parameters without stopping the motor. However the changeable parameters are limited.

When you turn ON the [SET] input, the inverter operates per the second set of parameters. When the terminal is turned OFF, the output function returns to the original settings (first set of motor parameters). Refer to "Configuring the Inverter for Multiple Motors" on page 4–58 for details.

Parameters	SET		SP-SET		Parameters	SET		SP-SET	
	Stop	Run	Stop	Run		Stop	Run	Stop	Run
F002/F202	✓	-	✓	✓	A093/A293	✓	-	✓	✓
F003/F203	✓	-	✓	✓	A094/A294	✓	-	✓	✓
A001/A201	✓	-	✓	-	A095/A295	✓	-	✓	✓
A002/A202	✓	-	✓	-	A096/A296	✓	-	✓	✓
A003/A203	✓	-	✓	-	b012/b212	✓	-	✓	-
A004/A204	✓	-	✓	-	b013/b213	✓	-	✓	-
A020/A220	✓	-	✓	✓	b021/b221	✓	-	✓	-
A041/A241	✓	-	✓	-	b022/b222	✓	-	✓	-
A042/A242	✓	-	✓	✓	b023/b223	✓	-	✓	-
A043/A243	✓	-	✓	✓	b028/b228	✓	-	✓	-
A044/A244	✓	-	✓	-	C001~C005/ C201~C205	✓	-	✓	-
A045/A245	✓	-	✓	-				✓	
A061/A261	✓	-	✓	✓	C041/C241	✓	-	✓	-
A062/A262	✓	-	✓	✓	H003/H203	✓	-	✓	-
A092/A292	✓	-	✓	✓	H004/H204	✓	-	✓	-
					H006/H206	✓	-	✓	-

Option Code	Terminal Symbol	Function Name	State	Description
08	SET	Set (select) 2nd Motor data	ON	causes the inverter to use the 2nd set of motor parameters for generating the frequency output to motor
53	SP-SET	Set 2nd motor data Special SET	OFF	causes the inverter to use the 1st (main) set of motor parameters for generating the frequency output to motor

Valid for inputs:	C001~C005
Required settings	(none)

Notes:

- If the terminal state is changed while the inverter is running, the inverter continues using the current set of parameters until the inverter is stopped.

Example (requires input configuration—see page 3–49):

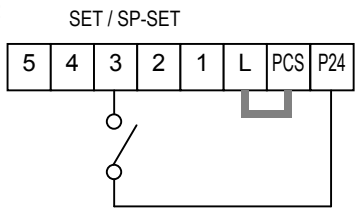

See I/O specs on page 4–6.

Two Stage Acceleration and Deceleration

When terminal [2CH] is turned ON, the inverter changes the rate of acceleration and deceleration from the initial settings (F002 and F003) to use the second set of acceleration/ deceleration values. When the terminal is turned OFF, the inverter is returned to the original acceleration and deceleration time (F002 acceleration time 1, and F003 deceleration time 1). Use A092 (acceleration time 2) and A0093 (deceleration time 2) to set the second stage acceleration and deceleration times.

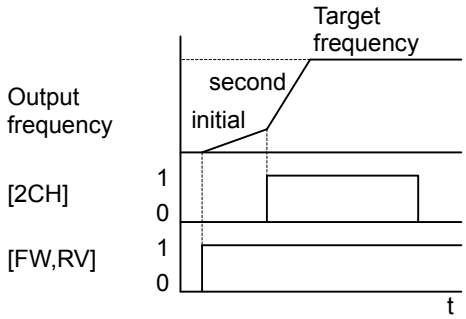

In the graph shown above, the [2CH] becomes active during the initial acceleration. This causes the inverter to switch from using acceleration 1 (F002) to acceleration 2 (A092).

Option Code	Terminal Symbol	Function Name	State	Description
09	2CH	Two-stage Acceleration and Deceleration	ON	Frequency output uses 2nd-stage acceleration and deceleration values
			OFF	Frequency output uses the initial acceleration 1 and deceleration 1 values

Valid for inputs:	C001~C005
Required settings	A092, A093, A094=00

Notes:

- Function A094 selects the method for second stage acceleration. It must be set = 00 to select the input terminal method in order for the [2CH] terminal assignment to operate.

Example (default input configuration shown—see page 3–49):

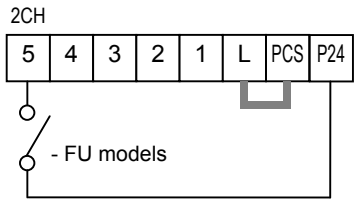

See I/O specs on page 4–6.

Free-run Stop

When the terminal [FRS] is turned ON, the inverter stops the output and the motor enters the free-run state (coasting). If terminal [FRS] is turned OFF, the output resumes sending power to the motor if the Run command is still active. The free-run stop feature works with other parameters to provide flexibility in stopping and starting motor rotation.

In the figure below, parameter B088 selects whether the inverter resumes operation from 0 Hz (left graph) or the current motor rotation speed (right graph) when the [FRS] terminal turns OFF. The application determines the best setting.

Parameter B003 specifies a delay time before resuming operation from a free-run stop. To disable this feature, use a zero delay time.

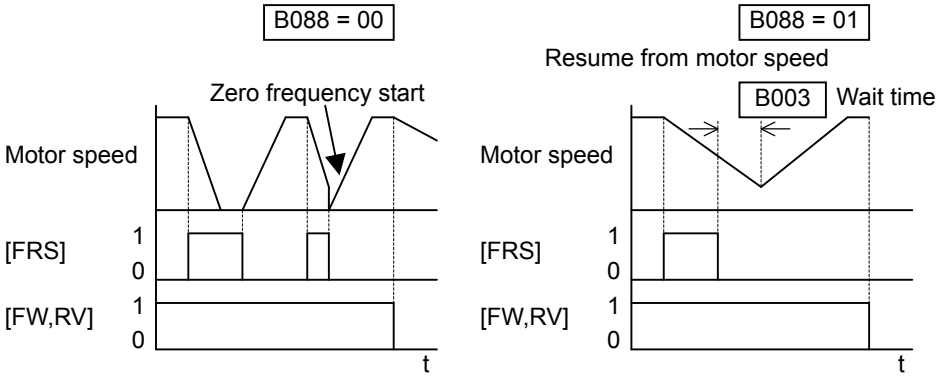

Option Code	Terminal Symbol	Function Name	State	Description
11	FRS	Free-run Stop	ON	Causes output to turn OFF, allowing motor to free run (coast) to stop
			OFF	Output operates normally, so controlled deceleration and stops motor

Valid for inputs:	C001~C005
Required settings	B003, B088, C011 to C015

Notes:

- When you want the [FRS] terminal to be active low (normally closed logic), change the setting (C011 to C015) that corresponds to the input (C001 to C005) that is assigned the [FRS] function.

Example (requires input configuration—see page 3–49):

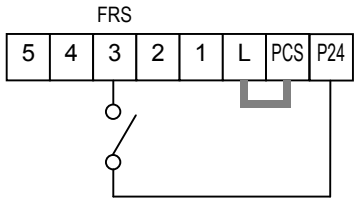

See I/O specs on page 4–6.

External Trip

When the terminal [EXT] is turned ON, the inverter enters the trip state, indicates error code E12, and stops the output. This is a general purpose interrupt type feature, and the meaning of the error depends on what you connect to the [EXT] terminal. Even if the [EXT] input is turned OFF, the inverter remains in the trip state. You must reset the inverter or cycle power to clear the error, returning the inverter to the Stop Mode.

In the graph below, the [EXT] input turns ON during normal Run Mode operation. The inverter lets the motor free-run to a stop, and the alarm output turns ON immediately. When the operator initiates a Reset command, the alarm and error are cleared. When the Reset is turned OFF, the motor begins rotation since the Run command is already active.

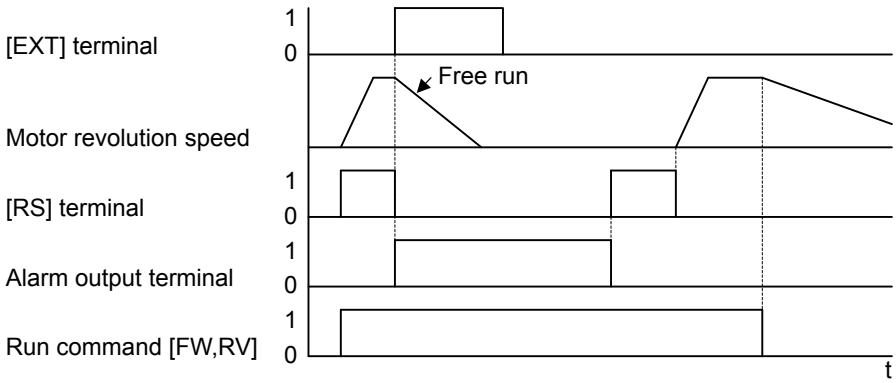

Option Code	Terminal Symbol	Function Name	State	Description
12	EXT	External Trip	ON	When assigned input transitions OFF to ON, inverter latches trip event and displays E12.
			OFF	No trip event for ON to OFF, any recorded trip events remain in history until Reset.

Valid for inputs:	C001~C005
Required settings	(none)

Notes:

- If the USP (Unattended Start Protection) feature is in use, the inverter will not automatically restart after canceling the EXT trip event. In that case, it must receive either another Run command (OFF-to- ON transition), a keypad Reset command, or an [RS] intelligent terminal input signal.

Example (requires input configuration— see page 3–49):

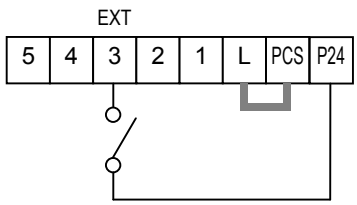

See I/O specs on page 4–6.

Unattended Start Protection

If the Run command is already set when power is turned ON, the inverter starts running immediately after powerup. The Unattended Start Protection (USP) function prevents that automatic startup, so that the inverter *will not* run without outside intervention. When USP is active and you need to reset an alarm and resume running, either turn the Run command OFF, or perform a reset operation by the terminal [RS] input or the keypad Stop/reset key.

In the figure below, the [USP] feature is enabled. When the inverter power turns ON, the motor does not start, even though the Run command is already active. Instead, it enters the USP trip state, and displays E13 error code. This requires outside intervention to reset the alarm by turning OFF the Run command per this example (or applying a reset). Then the Run command can turn ON again and start the inverter output.

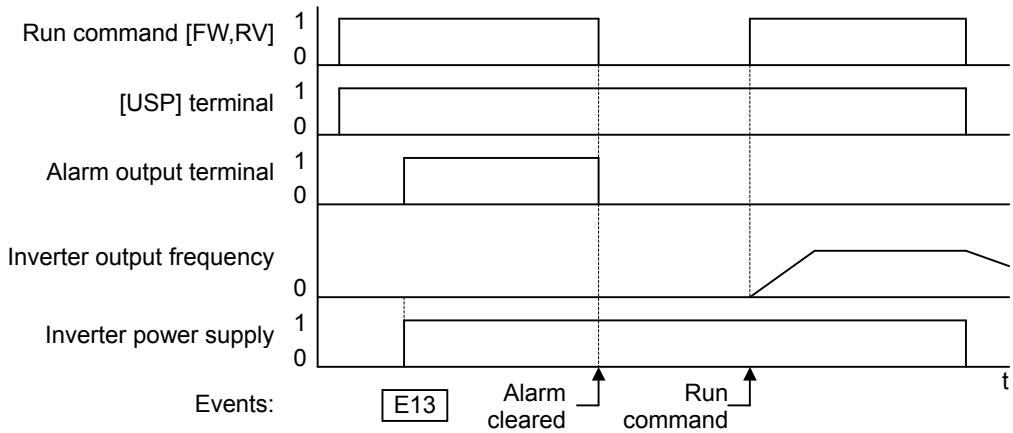

Option Code	Terminal Symbol	Function Name	State	Description
13	USP	Unattended Start Protection	ON	On powerup, the inverter will not resume a Run command (mostly used in the US)
			OFF	On powerup, the inverter will resume a Run command that was active before power loss

Valid for inputs:	C001~C005
Required settings	(none)

Notes:

- Note that when a USP error occurs and it is canceled by a reset from a [RS] terminal input, the inverter restarts running immediately.
- Even when the trip state is canceled by turning the terminal [RS] ON and OFF after an under voltage protection E09 occurs, the USP function will be performed.
- When the running command is active immediately after the power is turned ON, a USP error will occur. When this function is used, wait for at least three (3) seconds after the powerup to generate a Run command.

Example (default input configuration shown for –FEF2 and –FU2 models; –FRF2 models require input configuration—see page 3–49):

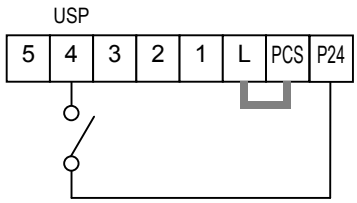

See I/O specs on page 4–6.

Software Lock

When the terminal [SFT] is turned ON, the data of all the parameters and functions (except the output frequency, depending on the setting of B031) is locked (prohibited from editing). When the data is locked, the keypad keys cannot edit inverter parameters. To edit parameters again, turn OFF the [SFT] terminal input.

Use parameter B031 to select whether the output frequency is excluded from the lock state or is locked as well.

Option Code	Terminal Symbol	Function Name	State	Description
15	SFT	Software Lock	ON	The keypad and remote programming devices are prevented from changing parameters
			OFF	The parameters may be edited and stored

Valid for inputs:	C001~C005
Required settings	B031 (excluded from lock)

Notes:

- When the [SFT] terminal is turned ON, only the output frequency can be changed.
- Software lock can include the output frequency by setting B031.
- Software lock by the operator is also possible without the [SFT] terminal being used (B031).

Example (requires input configuration—see page 3–49):

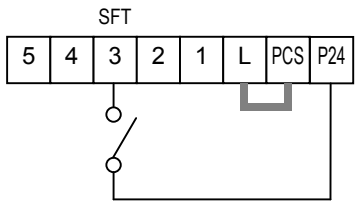

See I/O specs on page 4–6.

Analog Input Current/Voltage Select

The [AT] terminal selects whether the inverter uses the voltage [O] or current [OI] input terminals for external frequency control. When intelligent input [AT] is ON, you can set the output frequency by applying a current input signal at [OI]-[L]. When the [AT] input is OFF, you can apply a voltage input signal at [O]-[L] to set the output frequency. Note that you must also set parameter A001 = 01 to enable the analog terminal set for controlling the inverter frequency.

Option Code	Terminal Symbol	Function Name	State	Description
16	AT	Analog Input Voltage/Current Select	ON OFF	See the table down below

Valid for inputs:	C001~C005
Required settings	A001 = 01

Notes:

- If the [AT] option is not assigned to any intelligent input terminal, then inverter recognizes [AT] = OFF in following table.

Combination of A005 setting and [AT] input for analog input activation.

A005	[AT] Input	Analog Input Configuration
02	ON	Keypad Pot
	OFF	[O]
03	ON	Keypad Pot
	OFF	[OI]
04	(ignored)	[O]
05	(ignored)	[OI]

- Be sure to set the frequency source setting A001=01 to select the analog input terminals.

Example (default input configuration shown for –FEF2 and –FU2 models; –FRF2 models require input configuration—see page 3–49):

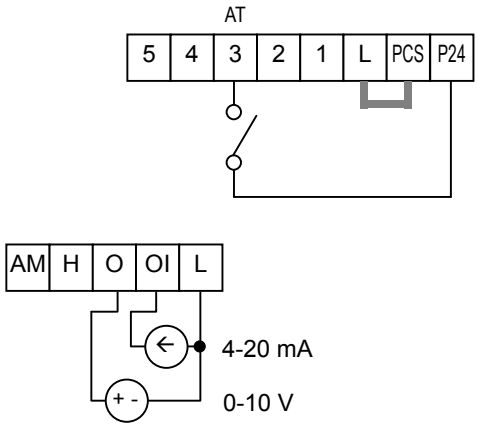

See I/O specs on page 4–6.

NOTE: You cannot use both the [O] and [OI] inputs at the same time on the X2002 inverter.

Reset Inverter

The [RS] terminal causes the inverter to execute the reset operation. If the inverter is in Trip Mode, the reset cancels the Trip state. When the signal [RS] is turned ON and OFF, the inverter executes the reset operation. The minimum pulse width for [RS] must be 12 ms or greater. The alarm output will be cleared within 30 ms after the onset of the Reset command.

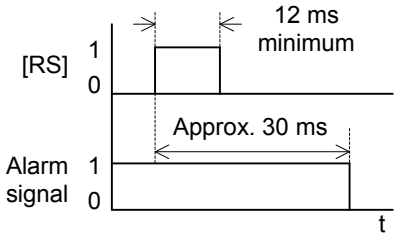

WARNING: After the Reset command is given and the alarm reset occurs, the motor will restart suddenly if the Run command is already active. Be sure to set the alarm reset after verifying that the Run command is OFF to prevent injury to personnel.

Option Code	Terminal Symbol	Function Name	State	Description
18	RS	Reset Inverter	ON	The motor output is turned OFF, the Trip Mode is cleared (if it exists), and powerup reset is applied
			OFF	Normal power ON operation

Valid for inputs:	C001~C005
Required settings	(none)

Notes:

- While the control terminal [RS] input is ON, the keypad displays alternating segments. The SRW optional remote keypad displays "HELLO!!". After RS turns OFF, the display recovers automatically.
- Pressing the Stop/Reset key of the digital operator can generate a reset operation only when an alarm occurs.

Example (default input configuration shown—see page 3–49):

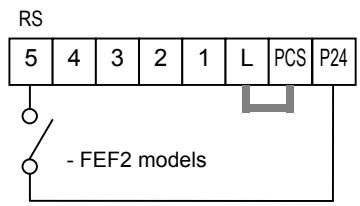

See I/O specs on page 4–6.

- A terminal configured with the [RS] function can only be configured for normally open operation. The terminal cannot be used in the normally closed contact state.
- When input power is turned ON, the inverter performs the same reset operation as it does when a pulse on the [RS] terminal occurs.
- The Stop/Reset key on the inverter is only operational for a few seconds after inverter powerup when a hand-held remote operator is connected to the inverter.
- If the [RS] terminal is turned ON while the motor is running, the motor will be free running (coasting).
- If you are using the output terminal OFF delay feature (any of C145, C147, C149 > 0.0 sec.), the [RS] terminal affects the ON-to-OFF transition slightly. Normally (without using OFF delays), the [RS] input causes the motor output and the logic outputs to turn OFF together, immediately. However, when any output uses an OFF delay, then after the [RS] input turns ON, that output will remain ON for an additional 1 sec. period (approximate) before turning OFF.

Thermistor Thermal Protection

Motors that are equipped with a thermistor can be protected from overheating. Input terminal [5] has the unique ability to sense a thermistor resistance. When the resistance value of the thermistor connected to terminal [TH] (5) and [L] is more than 3 k Ω ±10%, the inverter enters the Trip Mode, turns OFF the output to the motor, and indicates the trip status E35. Use this function to protect the motor from overheating.

Option Code	Terminal Symbol	Function Name	State	Description
19	TH	Thermistor Thermal Protection	ON	When a thermistor is connected to terminals [5] and [L], the inverter checks for over-temperature and will cause trip (E35) and turn OFF the output to the motor
			OFF	An open circuit in the thermistor causes a trip, and the inverter turns OFF the output

Valid for inputs:	C005 only
Required settings	(none)

Notes:

- Be sure the thermistor is connected to terminals [5] and [L]. If the resistance is above the threshold the inverter will trip. When the motor cools down enough, the thermistor resistance will change enough to permit you to clear the error. Press the STOP/Reset key to clear the error.

Example (requires input configuration—see page 3–49):

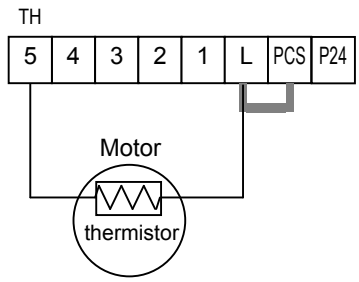

NOTE: The trip level is hardware wise fixed and cannot be changed.

Three-wire Interface Operation

The 3-wire interface is an industry standard motor control interface. This function uses two inputs for momentary contact start/stop control, and a third for selecting forward or reverse direction. To implement the 3-wire interface, assign 20 [STA] (Start), 21 [STP] (Stop), and 22 [F/R] (Forward/Reverse) to three of the intelligent input terminals. Use a momentary contact for Start and Stop. Use a selector switch, such as SPST for the Forward/Reverse input. Be sure to set the operation command selection A002=01 for input terminal control of motor.

If you have a motor control interface that needs logic-level control (rather than momentary pulse control), use the [FW] and [RV] inputs instead.

Option Code	Terminal Symbol	Function Name	State	Description
20	STA	Start Motor	ON	Start motor rotation on momentary contact (uses acceleration profile)
			OFF	No change to motor operation
21	STP	Stop Motor	ON	No change to motor operation
			OFF	Stop motor rotation on momentary contact (use deceleration profile)
22	F/R	Forward/Reverse	ON	Select reverse direction of rotation
			OFF	Select forward direction of rotation

Valid for inputs:	C001~C005
Required settings	A002 = 01

Notes:

- The STP logic is inverted. Normally the switch will be closed, so you open the switch to stop. In this way, a broken wire causes the motor to stop automatically (safe design).
- When you configure the inverter for 3-wire interface control, the dedicated [FW] terminal is automatically disabled. The [RV] intelligent terminal assignment is also disabled.

Example (default input configuration shown—see page 3–49):

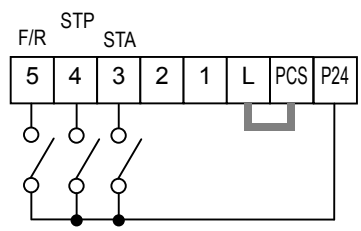

See I/O specs on page 4–6.

The diagram below shows the use of 3-wire control. STA (Start Motor) is an edge-sensitive input; an OFF-to-ON transition gives the Start command. The control of direction is level-sensitive, and the direction may be changed at any time. STP (Stop Motor) is also a level-sensitive input.

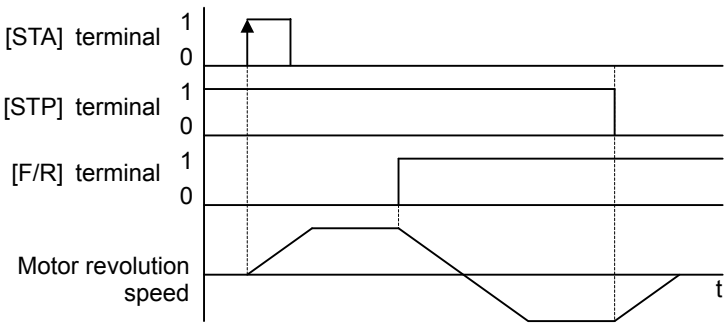

PID ON/OFF and PID Clear

The PID loop function is useful for controlling motor speed to achieve constant flow, pressure, temperature, etc. in many process applications. The PID Disable function temporarily suspends PID loop execution via an intelligent input terminal. It overrides the parameter A071 (PID Enable) to stop PID execution and return to normal motor frequency output characteristics. The use of PID Disable on an intelligent input terminal is optional. Of course, any use of the PID loop control requires setting PID Enable function A071=01.

The PID Clear function forces the PID loop integrator sum = 0. So, when you turn ON an intelligent input configured as [PIDC], the integrator sum is reset to zero. This is useful when switching from manual control to PID loop control and the motor is stopped.

CAUTION: Be careful not to turn PID Clear ON and reset the integrator sum when the inverter is in Run Mode (output to motor is ON). Otherwise, this could cause the motor to decelerate rapidly, resulting in a trip.

Option Code	Terminal Symbol	Function Name	State	Description
23	PID	PID Disable	ON	Disables PID loop execution
			OFF	Allows PID loop execution
24	PIDC	PID Clear	ON	Force the value of the integrator to zero
			OFF	No change in PID loop execution

Valid for inputs:	C001~C005
Required settings	A071

Notes:
- The use of [PID] and [PIDC] terminals are optional. Use A071=01 if you want PID loop control enabled all the time.
- Do not enable/disable PID control while the motor is running (inverter is in Run Mode).
- Do not turn ON the [PIDC] input while the motor is running (inverter is in Run Mode).

Example (default input configuration shown—see page 3–49):

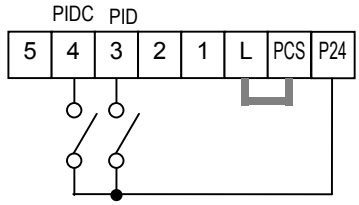

See I/O specs on page 4–6.

Remote Control Up and Down Functions

The [UP] [DWN] terminal functions can adjust the output frequency for remote control while the motor is running. The acceleration time and deceleration time of this function is same as normal operation ACC1 and DEC1 (2ACC1,2DEC1). The input terminals operate according to these principles:

- Acceleration - When the [UP] contact is turned ON, the output frequency accelerates from the current value. When it is turned OFF, the output frequency maintains its current value at that moment.
- Deceleration - When the [DWN] contact is turned ON, the output frequency decelerates from the current value. When it is turned OFF, the output frequency maintains its current value at that moment.

In the graph below, the [UP] and [DWN] terminals activate while the Run command remains ON. The output frequency responds to the [UP] and [DWN] commands.

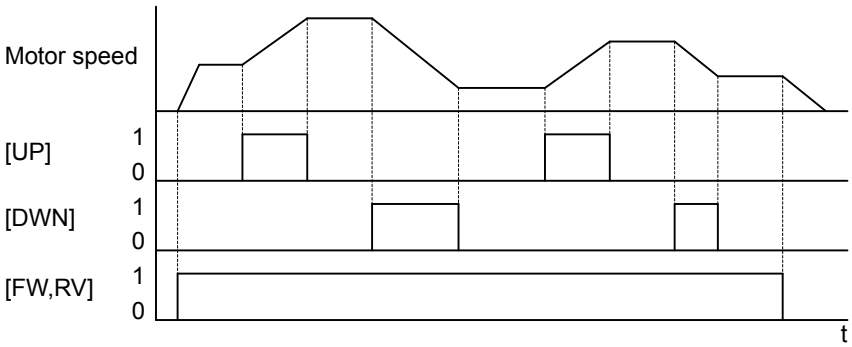

It is possible for the inverter to retain the frequency set from the [UP] and [DWN] terminals through a power loss. Parameter C101 enables/disables the memory. If disabled, the inverter retains the last frequency before an UP/DWN adjustment. Use the [UDC] terminal to clear the memory and return to the original set output frequency.

Option Code	Terminal Symbol	Function Name	State	Description
27	UP	Remote Control UP Function (motorized speed pot.)	ON	Accelerates (increases output frequency) motor from current frequency
			OFF	Output to motor operates normally
28	DWN	Remote Control DOWN Function (motorized speed pot.)	ON	Decelerates (increases output frequency) motor from current frequency
			OFF	Output to motor operates normally
29	UDC	Remote Control Data Clear	ON	Clears the Up/Down frequency memory
			OFF	No effect on Up/Down memory

Valid for inputs:	C001~C005
Required settings	A001 = 02

Example (default input configuration shown—see page 3–49):

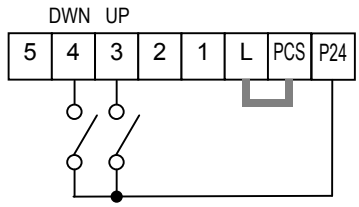

See I/O specs on page 4–6.

Notes:

- This feature is available only when the frequency command source is programmed for operator control. Confirm A001 is set to 02.
- This function is not available when [JG] is in use.
- The range of output frequency is 0 Hz to the value in A004 (maximum frequency setting).
- The minimum ON time of [UP] and [DWN] is 50 ms.
- This setting modifies the inverter speed from using F001 output frequency setting as a starting point.

Force Operation from Digital Operator

This function permits a digital operator interface to override the following two settings in the inverter:

- A001 - Frequency source setting
- A002 - Run command source setting

When using the [OPE] terminal input, typically A001 and A002 are configured for sources other than the digital operator interface for the output frequency and Run command sources, respectively. When the [OPE] input is ON, then user has immediate command of the inverter, to start or stop the motor and to set the speed.

Option Code	Terminal Symbol	Function Name	State	Description
31	OPE	Force Operation from Digital Operator	ON	Forces the operator interface to override: A001 - Frequency Source Setting, and A002 - Run Command Source Setting
			OFF	Parameters A001 and A002 are in effect again, for the frequency source and the Run command source, respectively

Valid for inputs:	C001~C005
Required settings	A001 (set not equal to 00) A002 (set not equal to 02)

Notes:

- When changing the [OPE] state during Run Mode (inverter is driving the motor), the inverter will stop the motor before the new [OPE] state takes effect.
- If the [OPE] input turns ON and the digital operator gives a Run command while the inverter is already running, the inverter stops the motor. Then the digital operator can control the motor.

Example (default input configuration shown—see page 3–49):

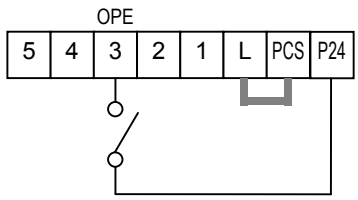

See I/O specs on page 4–6.

Add Frequency Enable

The inverter can add or subtract an offset value to the output frequency setting which is specified by A001 (will work with any of the five possible sources). The ADD Frequency is a value you can store in parameter A145. The ADD Frequency is summed with or subtracted from the output frequency setting only when the [ADD] terminal is ON. Function A146 selects whether to add or subtract. By configuring an intelligent input as the [ADD] terminal, your application can selectively apply the fixed value in A145 to offset (positively or negatively) the inverter output frequency in real time.

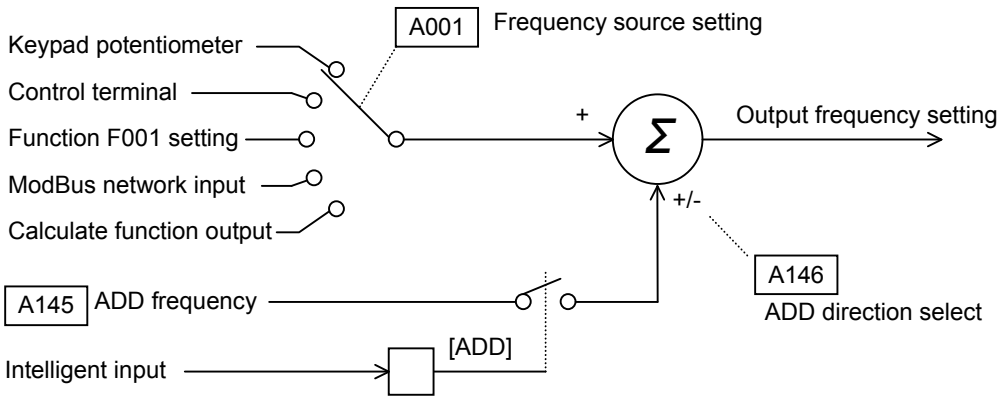

Option Code	Terminal Symbol	Function Name	State	Description
50	ADD	ADD Frequency Enable	ON	Applies the A145 Add Frequency value to the output frequency
			OFF	Does not apply the Add frequency. The output frequency retains its normal value

Valid for inputs:	C001~C005
Required settings	A001, A145, A146

Notes:

- A001 may specify any source; the Add Frequency will be added to or subtracted from that value to yield output frequency value.

Example (default input configuration shown—see page 3–49):

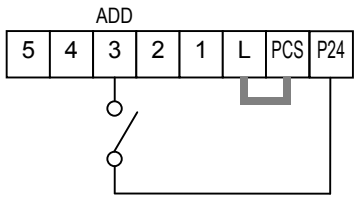

See I/O specs on page 4–6.

Force Terminal Mode

The purpose of this intelligent input is to allow a device to force the inverter to allow control of the following two parameters via the control terminals:

- A001 - Frequency source setting (01 = control terminals [FW] and [RV]
- A002 - Run command source setting (01 = control terminals [O] or [OI]

Some applications will require one or both settings above to use a source other than the terminals. You may prefer to normally use the inverter's keypad and potentiometer, or to use the ModBus network for control, for example. However, an external device can turn ON the [F-TM] input to force the inverter to (temporarily) allow control (frequency source and Run command) via control terminals. When the [F-TM] input is OFF, then the inverter uses the regular sources specified by A001 and A002 again.

Option Code	Terminal Symbol	Function Name	State	Description
51	F-TM	Force Terminal Mode	ON	Forces A001=01 (frequency source setting = control terminal), and A002=01(Run command source setting = control terminal)
			OFF	Inverter applies the user setting for A001 and A002 normally

Valid for inputs:	C001~C005
Required settings	A001, A002

Notes:

- When changing the [F-TM] state during Run Mode (inverter is driving the motor), the inverter will stop the motor before the new [F-TM] state takes effect.

Example (default input configuration shown—see page 3–49):

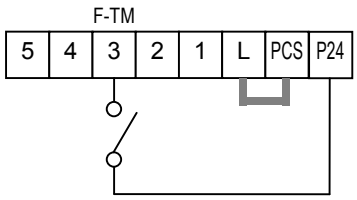

See I/O specs on page 4–6.

Inverter Ready

The purpose of this intelligent input is to make the inverter ready to start the motor immediately when the RUN command is given. When the RDY input is active, motor output terminal is active even if there is no RUN command.

Option Code	Terminal Symbol	Function Name	State	Description
52	RDY	Inverter Ready	ON	Inverter is ready to act immediately when the RUN command is given.
			OFF	Inverter performs normal start when the RUN command is given.

Valid for inputs:	C001~C005
Required settings	A001, A002

Notes:

Example (default input configuration shown—see page 3–49):

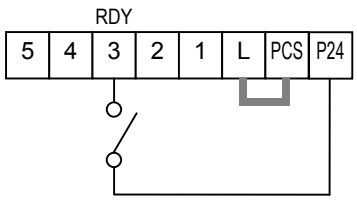

See I/O specs on page 4–6.

HIGH VOLTAGE: When RDY function is set ON, there will be a voltage at motor output terminals U, V and W even if the motor is in stop mode. Never touch the inverter power terminals while the inverter is powered up.

Safe Stop

The X2002 inverter can perform the "uncontrolled stopping by removal of motor power" which is Stop Category 0, as defined in EN60204-1. It is designed and approved as suitable for the requirements of Safety Category 3 in EN954-1, which is a protection against restart, called Safe Stop.

Prior to integration and use of X2002 Safe Stop in an installation, a thorough risk analysis on the installation must be carried out in order to determine whether the X2002 Safe Stop functionality and safety category are appropriate and sufficient.

The "Power Removal safety function" cannot be considered as a means of electrical disconnection of the motor (no electrical isolation). If necessary, a contactor must be used in the line or motor cables

The "Power Removal safety function" is not designed to overcome any malfunction in the drive process control or application functions.

The digital outputs (relay and/or open collector) available on the drive must not be considered as safety related signals. The outputs of the external safety relay must be used for integration into a safety related control/command circuit

Safety categories according to EN954-1

Category	Safety principle	Control system requirements	Behavior in the event of a fault
B	Selection of components that conform to relevant standards	Control in accordance with good engineering practice	Possible loss of safety function
1	Selection of proven components and basic safety principles	Use of tried and tested components and proven safety principles	Possible loss of safety function, but with less probability of this than with category B
2	Selection of proven components and basic safety principles	Cyclic testing of the safety function in suitable intervals	Fault detection at each test
3	Use of safety circuits	A single fault must not cause loss of the safety function. This single fault must be detected if reasonably practicable.	Safety function ensured in the event of a single fault
4	Use of safety circuits	A single fault must not cause loss of the safety function. This fault must be detected at or before the next demand on the safety function. An accumulation of faults must not cause loss of the safety function.	Safety function always ensured

The machinery manufacturer is responsible for selecting the required safety category depends on the level of risk factors given in standard EN954-1.

Stop categories according to EN60204-1

The wiring diagrams on the following pages take into account conformity with standard EN60204-1 which defines three categories of stops;

- Category 0 stopping by immediate removal of the power from the machine actuators (i.e. an uncontrolled stop)
- Category 1 a controlled stop with power available to the machine actuators to achieve the stop and then removal of power when the stop is achieved
- Category 2 a controlled stop with power left available to the machine actuators

The safe stop function must be activated after the installation, before usage, and at least once a year for preventive maintenance purposes.

The machine must be switched OFF before preventive maintenance takes place, and then powered up again. If during the testing the power supply to the motor is not switched OFF, safety integrity is no longer assured for the safe function. The drive must therefore be replaced to ensure the operational safety of the machine or of the process system.

Wiring Diagram Example

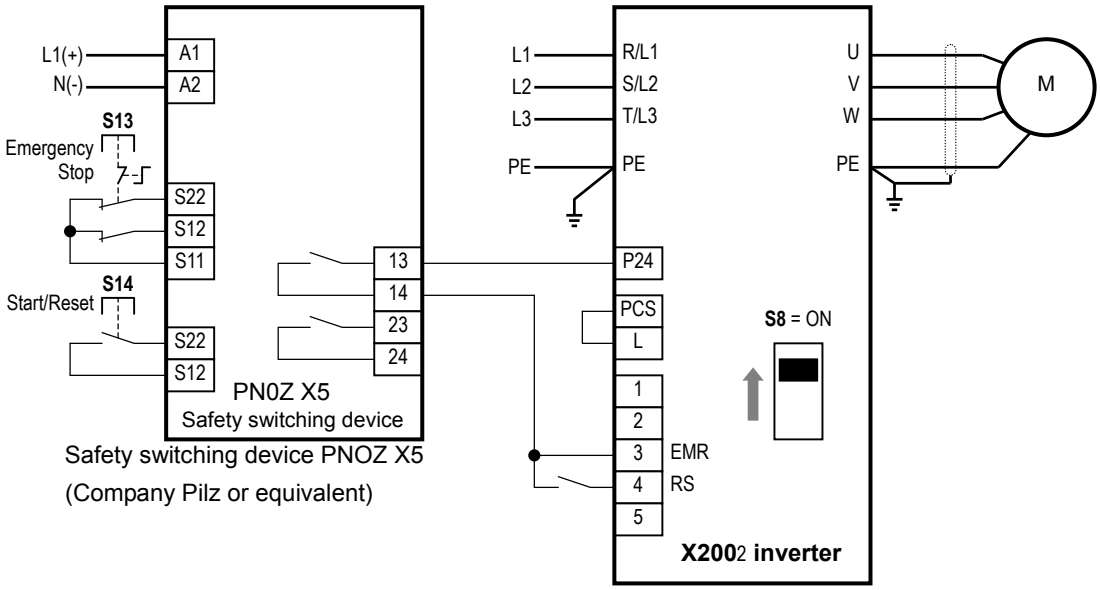

S13 Emergency STOP push-button switches the drive to free wheel and activates the function "Safe Stop".

S14 Start/Reset push-button

- Example of wiring diagram to use the "Safe Stop" function by means of the safety input "EMR" to meet EN954-1 category 3 requirements.
- The emergency stop circuit is monitored by means of an external safety relay (model PNOZ X5, company PILZ, in this example).
- One safety relay can be used for several inverters.

Activation of the "Safe Stop" by means of the digital input EMR leads to impulse inhibit and free-wheeling of the motor. This behavior corresponds to stop category 0 according to EN60204-1.

An automatic restart of the motor is prevented as long as the function "Safe Stop" is activated by means of the digital input EMR.

For applications where the frequency inverter is used for controlling the mechanical brake (e.g. crane function), a safety output of the external safety relay must be integrated into the control circuit of the brake in serial.

All inductivities like relays, contactors, etc. have to be equipped with an overvoltage protective circuit.

How to go into Safe Stop mode

The Safe Stop function of X200₂ is activated by turning ON the hardware switch (S8) located on the control card.

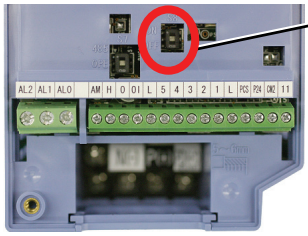

Be sure to power OFF the inverter when changing the switch S8.

Do not operate the switch S8 before the display goes out at power off. Otherwise E8 error (memory error) may occur.

A complete system is comprised of an inverter with AC motor and safety-tested external disconnecting device. The external disconnecting device must have been approved for at least safety category 3 according to EN954-1.

HIGH VOLTAGE: Dangerous voltage exists even after the Safe Stop is activated. It does *NOT* mean that the main power has been removed.

When the switch S8 is set to ON, input terminal for the emergency signal and the terminal for the reset signal will be assigned automatically to terminal 3 and 4. Parameter C003 is changed to EMR and parameter C004 is changed to RS automatically, and cannot be changed manually. The following table shows the assignments of each terminal according to the switch S8 condition.

Terminal Number	Default setting Safe Stop switch S8 = OFF	Safety Stop switch condition	
		Safe Stop switch S8 = **ON**	Safe Stop switch S8 = **ON → OFF**
1	**FW**	**FW**	**FW**
2	**RV**	**RV**	**RV**
3	**CF1**	**EMR** [HW based for 1b input]	- (No function)
4	**CF2** [US ver. :**USP**]	**RS** [HW based for 1a input]	**RS** [Normal 1a]
5	**RS** (PTC assignable)	- (No function)	- (No function)

This means that terminal 5 will be changed to “no function” when S8 is set to ON. If you want to use terminal 5 with a specific function when switch S8 is turned ON, you need to assign it manually. Additionally, terminal 3 will also change to “no function” when the switch S8 is set to OFF again.

Please do not change the setting of switch S8 during operation. Otherwise there might be unexpected system behavior.

Option Code	Terminal Symbol	Function Name	State	Description
64	EMR	Safe Stop	ON	Safe stop signal is activated
			OFF	Safe stop signal is not activated
Valid for inputs:		C003, C004		Refer to the wiring diagram on page 4-33
Required settings				
Notes:				See I/O specs on page 4–6.

NOTE: The total system (including the inverter unit) must always comply with EN60204-1 (safety of machinery) and other norms that apply. Refer to all applicable norms and standards required for your system.

Using Intelligent Output Terminals

The intelligent output terminals are programmable in a similar way to the intelligent input terminals. The inverter has several output functions that you can assign individually to two physical logic outputs. One of the outputs is an open-collector transistor, and the other output is the alarm relay (form C – normally open and normally closed contacts). The relay is assigned the alarm function by default, but you can assign it to any of the functions that the open-collector output uses.

Sinking Outputs, Open Collector

The open-collector transistor output can handle up to 50mA. We highly recommend that you use an external power source as shown at the right. It must be capable of providing at least 50mA to drive the output at full load. To drive loads that require more than 50mA, use external relay circuits as shown below right.

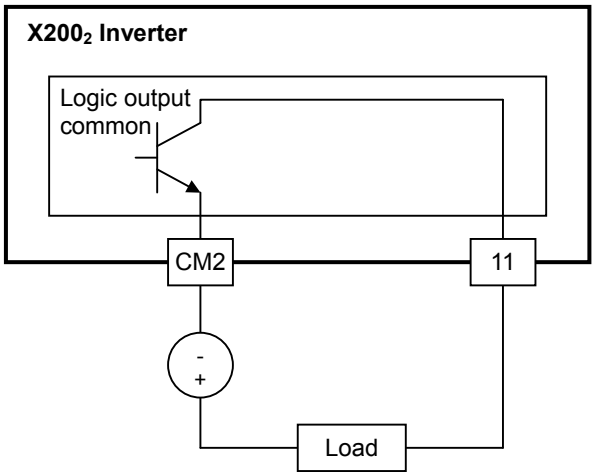

Sinking Outputs, Open Collector

If you need output current greater than 50mA, use the inverter output to drive a small relay. Be sure to use a diode across the coil of the relay as shown (reverse-biased) in order to suppress the turn-off spike, or use a solid-state relay.

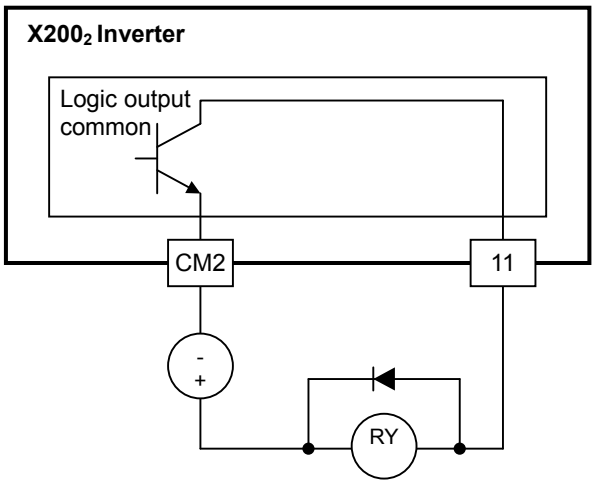

Internal Relay Output

The inverter has an internal relay output with normally open and normally closed contacts (Type 1 form C). The output signal that controls the relay is configurable; the Alarm Signal is the default setting. Thus, the terminals are labeled [AL0], [AL1], [AL2], as shown to the right. However, you can assign any one of the nine intelligent outputs to the relay. For wiring purposes, the general terminal functions are:

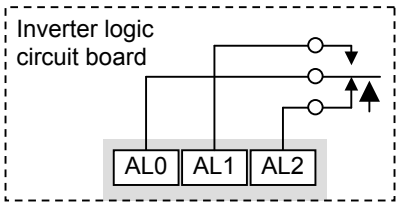

- [AL0] – Common contact
- [AL1] – Normally open contact
- [AL2] – Normally closed contact

The relay itself can be configured as "normally open or closed." Parameter C036, Alarm Relay Active State, is the setting. This setting determines whether or not the relay coil is energized when its output signal is OFF:

- C036=00 – "Normally open" (relay coil is **de-energized** when output signal is OFF)
- C036=01 – "Normally closed" (relay coil is **energized** when the output signal is OFF)

Since the relay already has normally open [AL1] and normally closed [AL2] contacts, the purpose of the ability to invert the relay coil's active state may not be obvious. *It allows you to determine whether or not an inverter power loss causes the relay to change state.* The default relay configuration is the Alarm Signal (C026=05), as shown to the right. And, C036=01 sets the relay to "normally closed" (relay coil normally energized). The reason for this is that a typical system design will require an inverter power loss to assert an alarm signal to external devices.

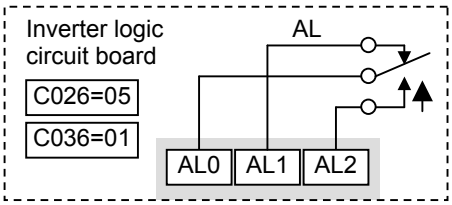

Relay shown with inverter power ON, Alarm Signal OFF

The relay can be used for other intelligent output signals, such as the Run Signal (set C026=00). For these remaining output signal types, the relay coil typically must NOT change state upon inverter power loss (set C036=00). The figure to the right shows the relay settings for the Run Signal output.

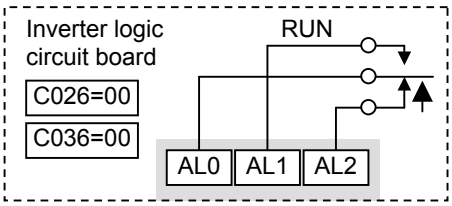

Relay shown with inverter power ON, Run Signal OFF

If you assign the relay an output signal other than the Alarm Signal, the inverter can still have an Alarm Signal output. In this case, you can assign it to terminal [11] , providing an open collector output.

Output Signal ON/OFF Delay Function

Intelligent outputs including terminals [11], and the output relay, have configurable signal transition delays. Each output can delay either the OFF-to-ON or ON-to-OFF transitions, or both. Signal transition delays are variable from 0.1 to 100.0 seconds. This feature is useful in applications that must tailor inverter output signals to meet timing requirements of certain external devices.

The timing diagram below shows a sample output signal (top line) and the results of various ON/OFF delay configurations.

- **Original signal** - This example signal waveform consists of three separate pulses named "A," "B," and "C."
- **...with ON delay** - Pulse A is delayed by the duration of the ON delay time. Pulses B and C do not appear at the output, because they are shorter than the ON delay.
- **...with OFF delay** - Pulse A is lengthened by the amount of the OFF delay time. The separation between pulses B and C does not appear at the output, because it is shorter than the OFF delay time.
- **...with ON/OFF delays** - Pulse A is delayed on both leading and trailing edges by the amounts of the ON and OFF delay times, respectively. Pulses B and C do not appear at the output, because they are shorter than the ON delay time.

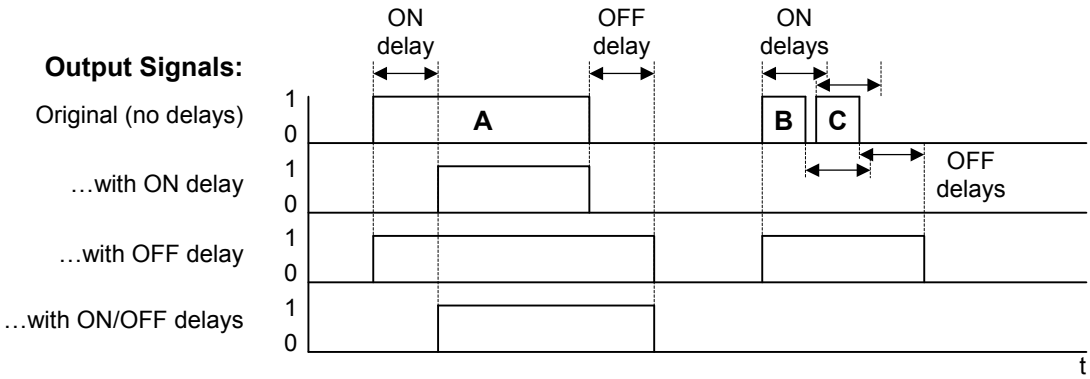

Func.	Description	Range	Default
C144	Terminal [11] ON delay	0.0 to 100.0 sec.	0.0
C145	Terminal [11] OFF delay	0.0 to 100.0 sec.	0.0
C148	Output relay ON delay	0.0 to 100.0 sec.	0.0
C149	Output relay OFF delay	0.0 to 100.0 sec.	0.0

Use of the ON/OFF signal delay functions are optional. Note that any of the intelligent output assignments in this section can be combined with ON/OFF signal timing delay configurations.

Run Signal

When the [RUN] signal is selected as an intelligent output terminal, the inverter outputs a signal on that terminal when it is in Run Mode. The output logic is active low, and is the open collector type (switch to ground).

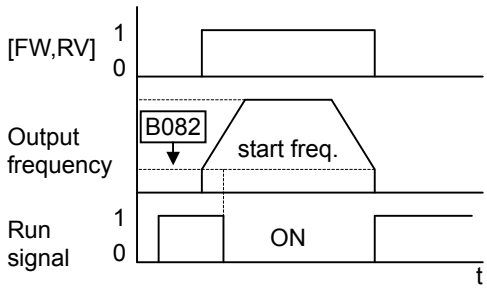

Option Code	Terminal Symbol	Function Name	State	Description
00	RUN	Run Signal	ON	when inverter is in Run Mode
			OFF	when inverter is in Stop Mode

Valid for inputs:	11, AL0 – AL2
Required settings	(none)

Notes:

- The inverter outputs the [RUN] signal whenever the inverter output exceeds the start frequency specified by parameter B082. The start frequency is the initial inverter output frequency when it turns ON.
- The example circuit for terminal [11] drives a relay coil. Note the use of a diode to prevent the negative going turn-off spike generated by the coil from damaging the inverter's output transistor.

Example for terminal [11] (default output configuration shown – see page 3-54):

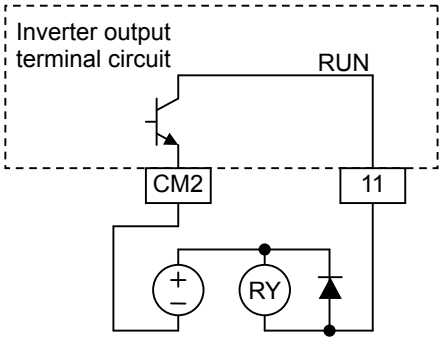

Example for terminal [AL0], [AL1], [AL2] (requires output configuration – see page 4-35 and 3-54):

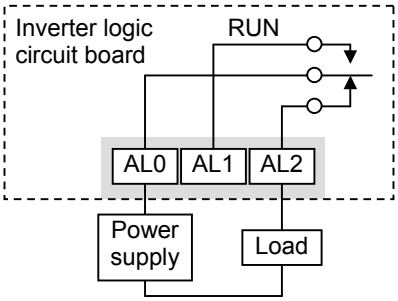

See I/O specs on page 4-6

Operations and Monitoring

Frequency Arrival Signals

The *Frequency Arrival* group of outputs helps coordinate external systems with the current velocity profile of the inverter. As the name implies, output [FA1] turns ON when the output *frequency arrives* at the standard set frequency (parameter F001). Output [FA2] relies on programmable accel/ decel thresholds for increased flexibility. For example, you can have an output turn ON at one frequency during acceleration, and have it turn OFF at a different frequency during deceleration. All transitions have hysteresis to avoid output chatter if the output frequency is near one of the thresholds.

Option Code	Terminal Symbol	Function Name	State	Description
01	FA1	Frequency Arrival Type 1 – Constant Speed	ON	when output to motor is at the set frequency
			OFF	when output to motor is OFF, or in any acceleration or deceleration ramp
02	FA2	Frequency Arrival Type 2 – Over frequency	ON	when output to motor is at or above the set frequency thresholds for, even if in acceleration or deceleration ramps
			OFF	when output to motor is OFF, or during acceleration or deceleration before the respective thresholds are crossed

Valid for inputs:	11, AL0 – AL2
Required settings	(none)

Notes:

- For most applications you will need to use only one type of frequency arrival outputs (see examples). However, it is possible assign both output terminals to output functions [FA1] and [FA2].
- For each frequency arrival threshold, the output anticipates the threshold (turns ON early) by 1.5Hz.
- The output turns OFF as the output frequency moves away from the threshold, delayed by 0.5Hz.
- The delay time of the output signal is 60 ms (nominal).
- The example circuit for terminal [11] drives a relay coil. Note the use of a diode to prevent the negative going turn-off spike generated by the coil from damaging the inverter's output transistor.

Example for terminal [11] (default output configuration shown – see page 3-54):

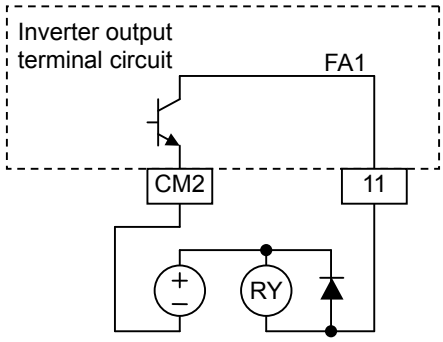

Example for terminal [AL0], [AL1], [AL2] (requires output configuration – see page 54):

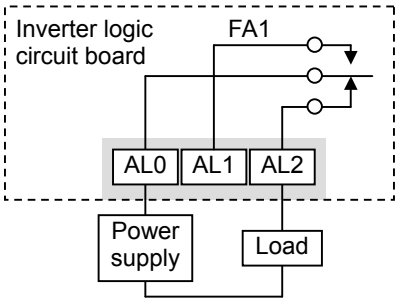

See I/O specs on page 4-6

Frequency arrival output [FA1] uses the standard output frequency (parameter F001) as the threshold for switching. In the figure to the right, Frequency Arrival [FA1] turns ON when the output frequency gets within *Fon* Hz below or *Fon* Hz above the target constant frequency, where *Fon* is 1% of the set maximum frequency and *Foff* is 2% of the set maximum frequency. This provides hysteresis that prevents output chatter near the threshold value. The hysteresis effect causes the output to turn ON slightly *early* as the speed approaches the threshold. Then the turn-OFF point is slightly *delayed*. The timing is further modified by a small 60 ms delay. Note the active low nature of the signal, due to the open collector output.

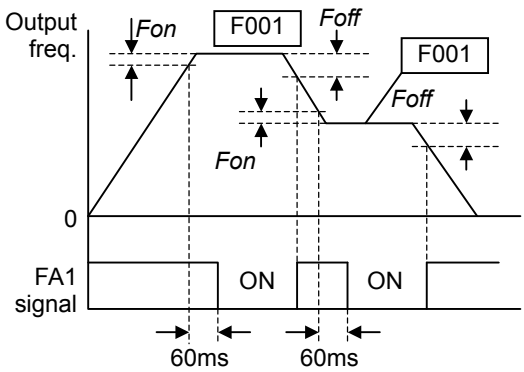

Fon=1% of max. frequency
Foff=2% of max. frequency

Frequency arrival output [FA2] works the same way; it just uses two separate thresholds as shown in the figure to the right. These provide for separate acceleration and deceleration thresholds to provide more flexibility than for [FA1]. [FA2] uses C042 during acceleration for the ON threshold, and C043 during deceleration for the OFF threshold. This signal also is active low and has a 60 ms delay after the frequency thresholds are crossed. Having different accel and decel thresholds provides an asymmetrical output function. However, you can use equal ON and OFF thresholds, if desired.

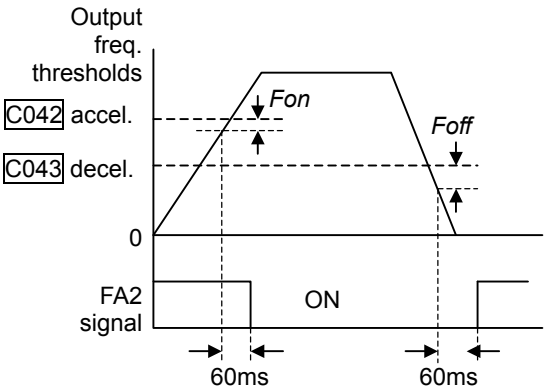

Fon=1% of max. frequency
Foff=2% of max. frequency

Overload Advance Notice Signal

When the output current exceeds a preset value, the [OL] terminal signal turns ON. The parameter C041 sets the overload threshold. The overload detection circuit operates during powered motor operation and during regenerative braking. The output circuits use open-collector transistors, and are active low.

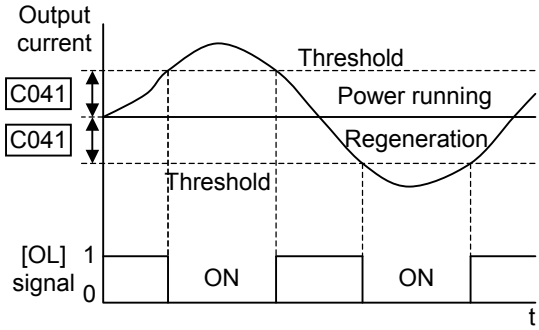

Option Code	Terminal Symbol	Function Name	State	Description
03	OL	Overload Advance Notice Signal	ON	when output current is more than the set threshold for the overload signal
			OFF	when output current is less than the set threshold for the overload signal

Valid for inputs:	11, AL0 – AL2
Required settings	C041

Notes:

- The default value is 100%. To change the level from the default, set C041 (overload level).
- The accuracy of this function is the same as the function of the output current monitor on the [FM] terminal (see "Analog Output Operation" on page 4–55).
- The example circuit for terminal [11] drives a relay coil. Note the use of a diode to prevent the negative-going turn-off spike generated by the coil from damaging the inverter's output transistor.

Example for terminal [11] (default output configuration shown – see page 3-35):

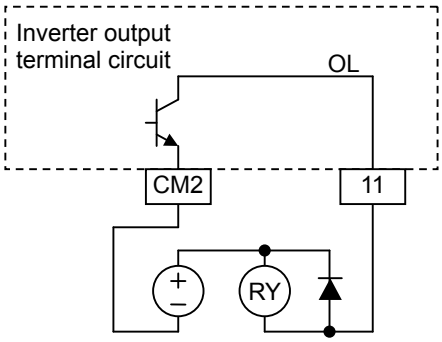

Example for terminal [AL0], [AL1], [AL2] (requires output configuration – see page 4-35 and 3-54):

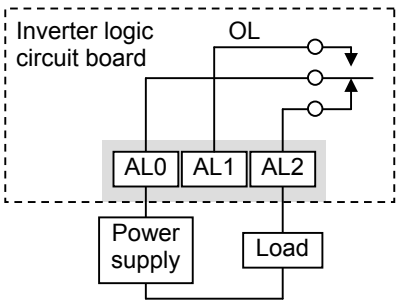

See I/O specs on page 4-6

Output Deviation for PID Control

The PID loop error is defined as the magnitude (absolute value) of the difference between the Setpoint (target value) and the Process Variable (actual value). When the error magnitude exceeds the preset value for C044, the [OD] terminal signal turns ON. Refer to "PID Loop Operation" on page 4–56.

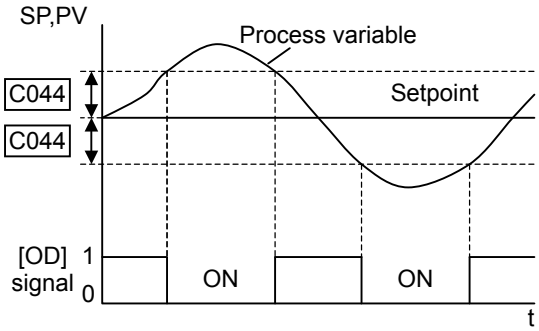

Option Code	Terminal Symbol	Function Name	State	Description
04	OD	Output Deviation for PID Control	ON	when PID error is more than the set threshold for the deviation signal.
			OFF	when PID error is less than the set threshold for the deviation signal

Valid for inputs:	11, AL0 – AL2
Required settings	C044

Notes:

- The default difference value is set to 3%. To change this value, change parameter C044 (deviation level).
- The example circuit for terminal [11] drives a relay coil. Note the use of a diode to prevent the negative-going turn-off spike generated by the coil from damaging the inverter's output transistor.

Example for terminal [11] (default output configuration shown – see page 3-54):

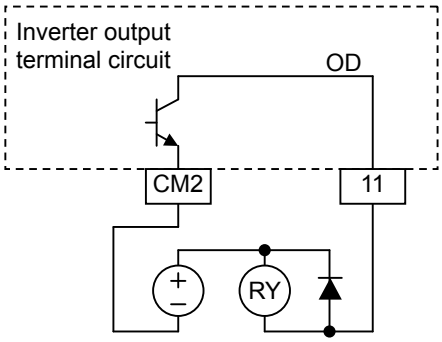

Example for terminal [AL0], [AL1], [AL2] (requires output configuration – see page 4-35 and 3-54):

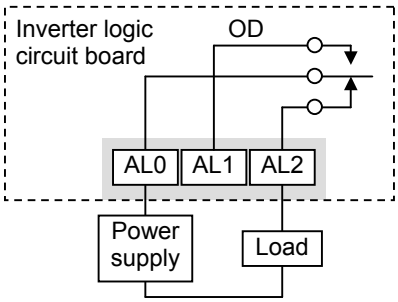

See I/O specs on page 4-6

Alarm Signal

The inverter alarm signal is active when a fault has occurred and it is in the Trip Mode (refer to the diagram at right). When the fault is cleared the alarm signal becomes inactive.

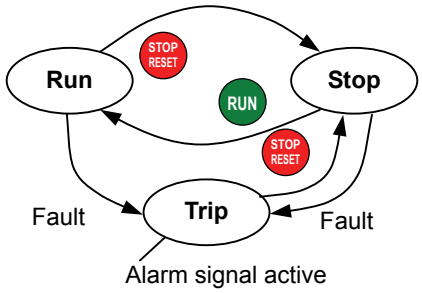

We must make a distinction between the alarm *signal* AL and the alarm relay *contacts* [AL0], [AL1] and [AL2]. The signal AL is a logic function, which you can assign to the open collector output terminal [11] or the relay outputs.
The most common (and default) use of the relay is for AL, thus the labeling of its terminals. Use an open collector output (terminal [11]) for a low-current logic signal interface or to energize a small relay (50 mA maximum). Use the relay output to interface to higher voltage and current devices (10 mA minimum).

Option Code	Terminal Symbol	Function Name	State	Description
05	AL	Alarm Signal	ON	when an alarm signal has occurred and has not been cleared
			OFF	when no alarm has occurred since the last clearing of alarm(s)

Valid for inputs:	11, AL0 – AL2
Required settings	C026, C036

Notes:

- By default, the relay is configured as normally closed (C036=01). Refer to the next page for an explanation.
- In the default relay configuration, an inverter power loss turns ON the alarm output. the alarm signal remains ON as long as the external control circuit has power.
- When the relay output is set to normally closed, a time delay of less than 2 seconds occurs after powerup before the contact is closed.
- Terminal [11] is an open collector output, so the electric specifications of [AL] are different from the contact output terminals [AL0], [AL1], [AL2].
- This signal output has the delay time (300 ms nominal) from the fault alarm output.
- The relay contact specifications are in "Control Logic Signal Specifications" on page 4–6. The contact diagrams for different conditions are on the next page.

Example for terminal [11] (default output configuration shown – see page 3-54):

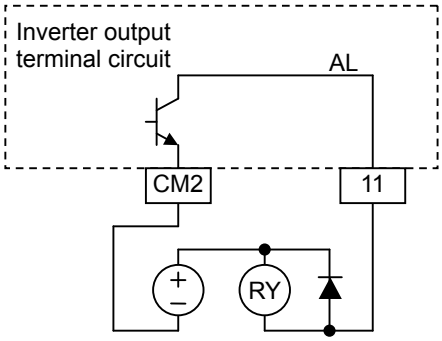

Example for terminal [AL0], [AL1], [AL2] (requires output configuration – see page 4-35 and 3-54):

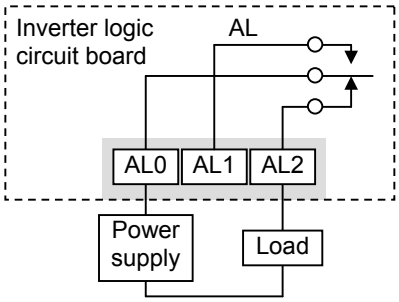

See I/O specs on page 4-6

The alarm relay output can be configured in two main ways:

- **Trip/Power Loss Alarm –** The alarm relay is configured as normally closed (C036=1) by default, shown below (left). An external alarm circuit that detects broken wiring also as an alarm connects to [AL0] and [AL1]. After powerup and short delay (< 2 seconds), the relay energizes and the alarm circuit is OFF. Then, either an inverter trip event or an inverter power loss will de-energize the relay and open the alarm circuit

- **Trip Alarm –** Alternatively, you can configure the relay as normally open (C036=0), shown below (right). An external alarm circuit that detects broken wiring also as an alarm connects to [AL0] and [AL2]. After powerup, the relay energizes only when an inverter trip event occurs, opening the alarm circuit. However, in this configuration, an inverter power loss does not open the alarm circuit.

Be sure to use the relay configuration that is appropriate for your system design. Note that the external circuits shown assume that a closed circuit = no alarm condition (so that a broken wire also causes an alarm). However, some systems may require a closed circuit = alarm condition. In that case, then use the opposite terminal [AL1] or [AL2] from the ones shown.

N.C. contacts (C036=01)		N.O. contacts (C036=00)	
During normal operation	When an alarm occurs or when power is OFF	During normal operation or when power is OFF	When an alarm occurs

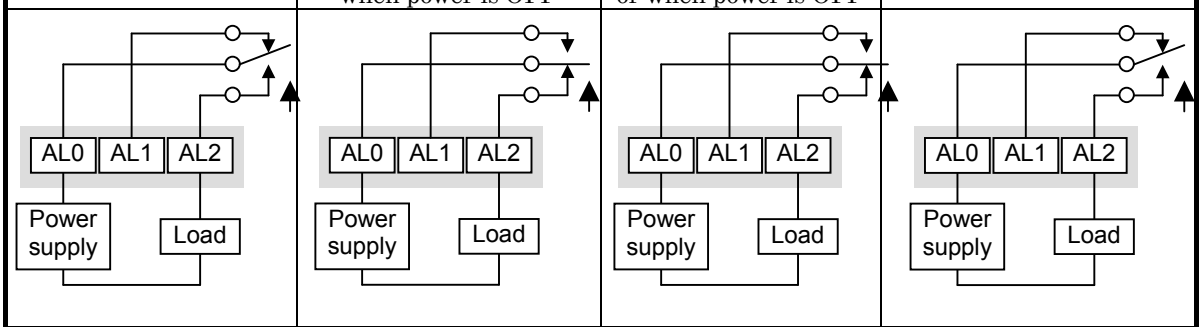

Power	Run Mode	AL0-AL1	AL0-AL2
ON	Normal	Closed	Open
ON	Trip	Open	Closed
OFF	–	Open	Closed

Power	Run Mode	AL0-AL1	AL0-AL2
ON	Normal	Open	Closed
ON	Trip	Closed	Open
OFF	–	Open	Closed

Analog Input Disconnect Detect

This feature is useful when the inverter receives a speed reference from an external device. Upon input signal loss at either the [O] or [OI] terminal, the inverter normally just decelerates the motor to a stop. However, the inverter can use the intelligent output terminal [Dc] to signal other devices that a signal loss has occurred.

Voltage signal loss at [O] terminal - Parameter B082 is the Start Frequency Adjustment. It sets the beginning (minimum) output frequency when the speed reference source is greater than zero. If the analog input at terminal [O] is less than the Start Frequency, the inverter turns ON the [Dc] output to indicate a signal loss condition.

Current signal loss at [OI] terminal - The [OI] terminal accepts a 4mA to 20mA signal, with 4mA representing the beginning of the input range. If the input current falls below 4mA, the inverter applies a threshold to detect signal loss.

Note that a signal loss is not an inverter trip event. When the analog input value is again above the B082 value, the [Dc] output turns OFF. There is no error condition to clear.

Option Code	Terminal Symbol	Function Name	State	Description
06	Dc	Analog Input Disconnect Detect	ON	when the [O] input value < B082 Start Frequency Adjustment (signal loss detected), or when the [OI input current is less than 4mA
			OFF	when no signal loss is detected

Valid for inputs:	11, AL0 – AL2
Required settings	A001=01, B082

Notes:

- The [Dc] output can indicate an analog signal disconnect when the inverter is in Stop Mode, as well as Run Mode.
- The example circuit for terminal [11] drives a relay coil. Note the use of a diode to prevent the negative-going turn-off spike generated by the coil from damaging the inverter's output transistor.

Example for terminal [11] (default output configuration shown – see page 3-54):

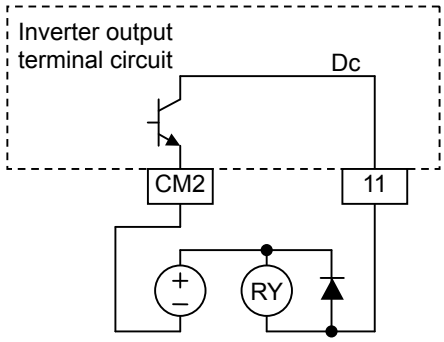

Example for terminal [AL0], [AL1], [AL2] (requires output configuration – see page 4-35 and 3-54):

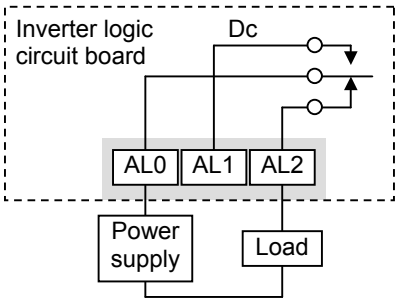

See I/O specs on page 4-6

PID Second Stage Output

The inverter has a built-in PID loop feature for *two-stage control,* useful for certain applications such as building ventilation or heating and cooling (HVAC). In an ideal control environment, a single PID loop controller (stage) would be adequate. However, in certain conditions, the maximum output energy from the first stage is not enough to maintain the Process Variable (PV) at or near the Setpoint (SP). And, the output of the first stage is in saturation. A simple solution is to add a second stage, which puts an additional and constant amount of energy into the system under control. When size properly, the boost from the second stage brings the PV toward the desired range, allowing the first stage PID control to return to its linear range of operation.

The two-stage method of control has some advantages for particular applications.

- The second stage is only ON in adverse conditions, so there is an energy savings during normal conditions.
- Since the second stage is simple ON/OFF control, it is less expensive to add than just duplicating the first stage.
- At powerup, the boost provided by the second stage helps the process variable reach the desired setpoint sooner than it would if the first stage acted alone.
- Even though the second stage is simple ON/OFF control, when it is an inverter you can still adjust the output frequency to vary the boost it provides.

Refer to the example diagram below. Its two stages of control are defined as follows:

- Stage 1 - Inverter #1 operating in PID loop mode, with motor driving a fan
- Stage 2 - Inverter #2 operating as an ON/OFF controller, with motor driving a fan

Stage #1 provides the ventilation needs in a building most of the time. On some days, there is a change in the building's air volume because large warehouse doors are open. In that situation, Stage #1 alone cannot maintain the desired air flow (PV sags under SP). Inverter #1 senses the low PV and its PID Second Stage Output at [FBV] terminal turns ON. This gives a Run FWD command to Inverter #2 to provide the additional air flow.

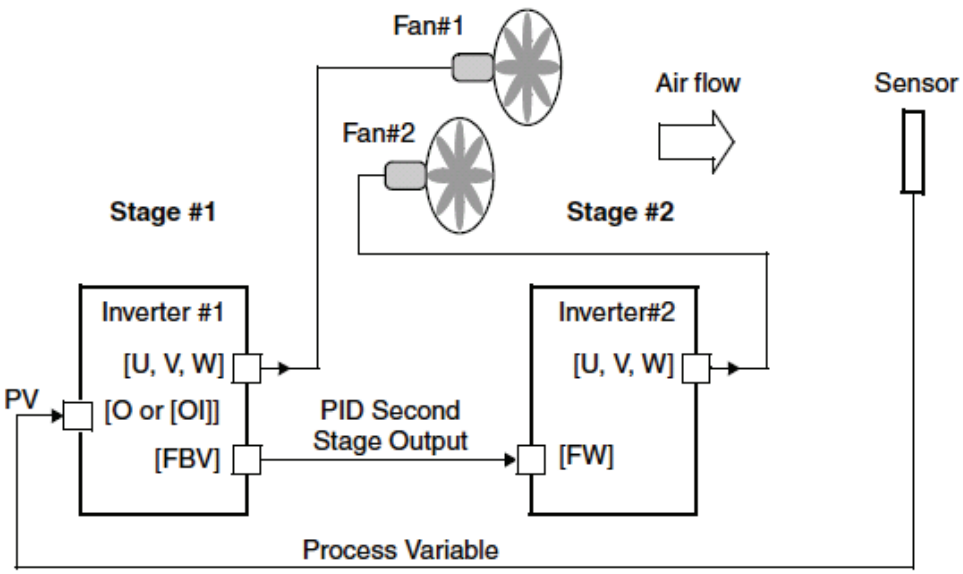

To use the PID Second Stage Output feature, you will need to choose upper and lower limits for the PV, via C053 and C052 respectively. As the timing diagram below shows, these are the thresholds Stage #1 inverter uses to turn ON or OFF Stage #2 inverter via the [FBV] output. The vertical axis units are percent (%) for the PID setpoint, and for the upper and lower limits. The output frequency, in Hz, is superimposed onto the same diagram.

When the system control begins, the following events occur (in sequence in the timing diagram):

1. Stage #1 inverter turns ON via the [FW] Run command.
2. Stage #1 inverter turns ON the [FBV] output, because the PV is below the PV low limit C053. So, Stage #2 is assisting in loop error correction from the beginning.
3. The PV rises and eventually exceeds the PV high limit C052. Stage #1 inverter then turns OFF the [FBV] output to Stage #2, since the boost is no longer needed.
4. When the PV begins decreasing, only Stage #1 is operating, and it is in the linear control range. This region is where a properly configured system will operate most often.
5. The PV continues to decrease until it crosses under the PV low limit (apparent external process disturbance). Stage #1 inverter turns ON the [FBV] output, and Stage #2 inverter is assisting again.
6. After the PV rises above the PV low limit, the [FW] Run command to Stage #1 inverter turns OFF (as in a system shutdown).
7. Stage #1 inverter enters Stop Mode and automatically turns OFF the [FBV] output, which causes Stage #2 inverter to also stop.

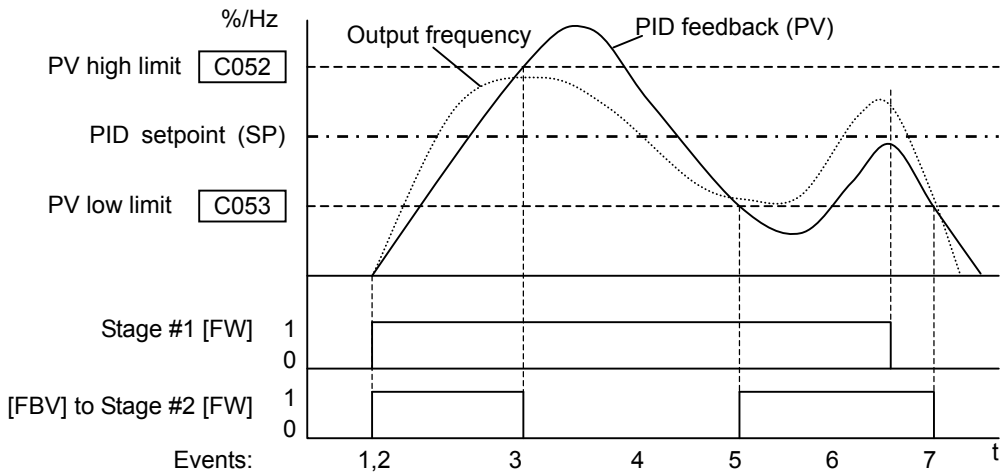

The terminal [FBV] configuration table is on the following page.

Option Code	Terminal Symbol	Function Name	State	Description
07	FBV	Feedback Value Check	ON	• Transitions to ON when the inverter is in RUN Mode and the PID Process Variable (PV) is less than the Feedback Low Limit (C053)
			OFF	• Transitions to OFF when the PID Feedback Value (PV) exceeds the PID High Limit (C052) • Transitions to OFF when the inverter goes from Run Mode to Stop Mode

Valid for inputs:	11, AL0 – AL2
Required settings	A076, C052, C053

Notes:

- The [FBV] is designed for implementing two-stage control. The PV high limit and PV low limit parameters, C052 and C053, do not function as process alarm thresholds. Terminal [FBV] does not provide a PID alarm function.
- The example circuit for terminal [11] drives a relay coil. Note the use of a diode to prevent the negative-going turn-off spike generated by the coil from damaging the inverter's output transistor.

Example for terminal [11] (default output configuration shown – see page 3-54):

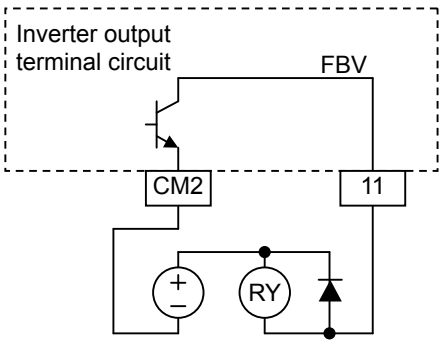

Example for terminal [AL0], [AL1], [AL2] (requires output configuration – see page 4-35 and 3-54):

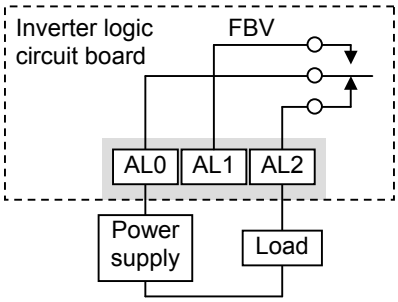

See I/O specs on page 4-6

Network Detection Signal (Integrated ModBus)

The Network Detection Signal output indicates the general status of network communications (integrated ModBus communication). The inverter has a programmable watchdog timer to monitor network activity. Parameter C077 sets the time-out period. If communications stop or pause longer than the specified time-out period, the NDc output turns ON.

Option Code	Terminal Symbol	Function Name	State	Description
08	NDc	Network Disconnection Signal (ModBus)	ON	when the communication watchdog timer (period specified by C077) has timed out.
			OFF	when the communication watchdog timer is satisfied by regular communications activity

Valid for inputs:	11, AL0 – AL2
Required settings	C076, C077

Notes:

- To disable the communications watchdog timer, set C077=00.00 sec.
- If you set Communications Error Select to "Disable" (C076=02), you still have the option of using the Network Detection Signal and setting the watchdog time-out period with C077.

Example for terminal [11] (default output configuration shown – see page 3-54):

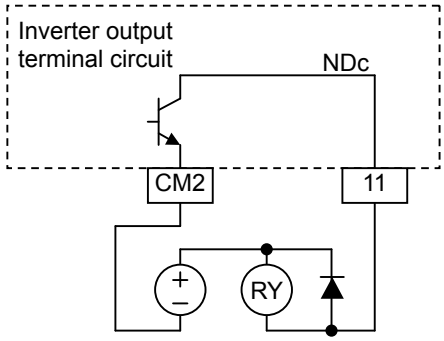

Example for terminal [AL0], [AL1], [AL2] (requires output configuration – see page 4-35 and 3-54):

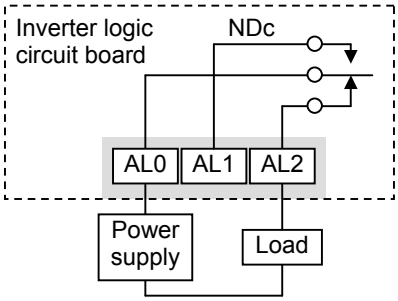

See I/O specs on page 4-6

Additionally, the inverter can respond to a communications time-out in various ways. Refer to the following diagram (top of next page). You configure the desired response via function C076, Communications Error Select. This selects whether or not you want the inverter to trip (alarm with error code E60) and whether to stop the motor or just let it coast. Together, parameters C076 and C077 set the network detection watchdog time-out and the inverter's response.

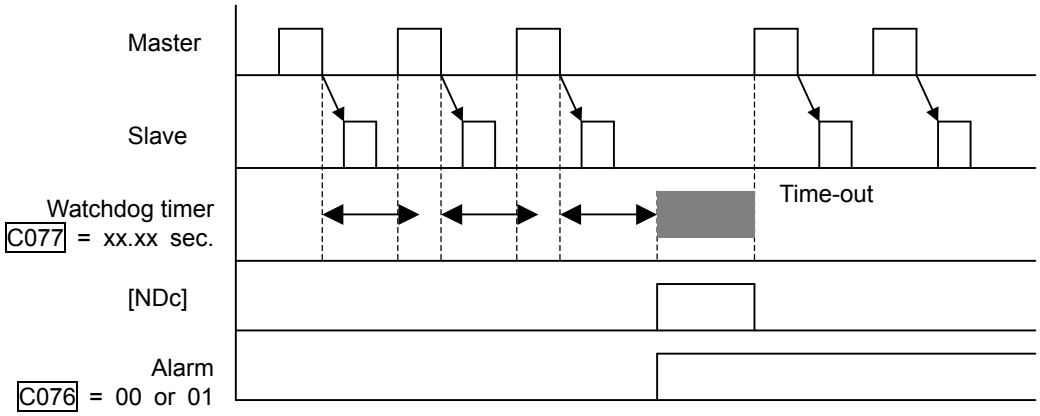

Logic Output Function

The Logic Output Function uses the inverter's built-in logic feature. You can select any two of the other nine intelligent output options for internal inputs (use C141 and C142). Then, use C143 to configure the logic function to apply the logical AND, OR, or XOR (exclusive OR) operator as desired to the two inputs.

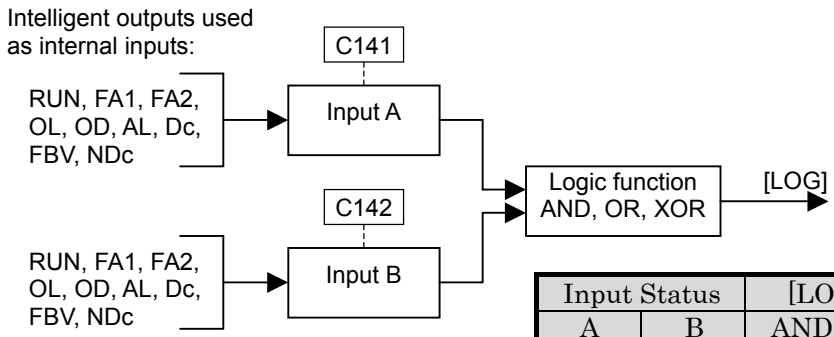

Input Status		[LOG] Output State		
A	B	AND	OR	XOR
0	0	0	0	0
0	1	0	1	1
1	0	0	1	1
1	1	1	1	0

Option Code	Terminal Symbol	Function Name	State	Description
09	LOG	Logic Output Function	ON	when the Boolean operation specified by C143 has a logical "1" result
			OFF	when the Boolean operation specified by C143 has a logical "0" result

Valid for inputs:	11, AL0 – AL2
Required settings	C141, C142, C143

Notes:

Example for terminal [11] (default output configuration shown – see page 3-54):

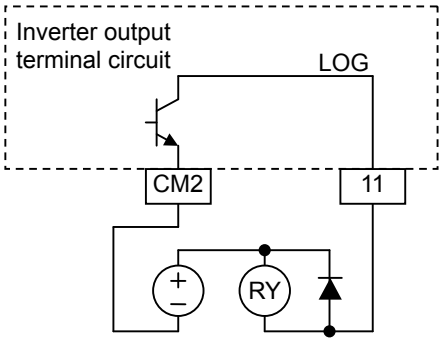

Example for terminal [AL0], [AL1], [AL2] (requires output configuration – see page 4-35 and 3-54):

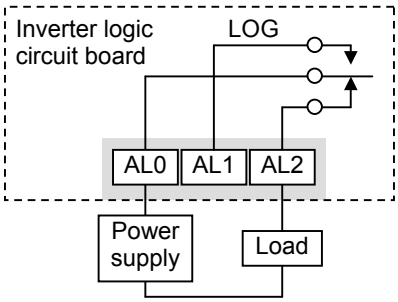

See I/O specs on page 4-6

Network Detection Signal (FieldBus Option)

The Network Detection Signal output indicates the general status of network communications when using a FieldBus option. The inverter has a programmable watchdog timer to monitor network activity. Parameter P044 sets the time-out period. If communications stop or pause longer than the specified time-out period, the ODc output turns ON.

Option Code	Terminal Symbol	Function Name	State	Description
10	ODc	Network Disconnection Signal (Option module)	ON	when the communication watchdog timer (period specified by P044) has timed out.
			OFF	when the communication watchdog timer is satisfied by regular communications activity

Valid for inputs:	11, AL0 – AL2
Required settings	P044, P045

Notes:

- To disable the communications watchdog timer, set P044=00.00 sec.

Example for terminal [11] (default output configuration shown – see page 3-54):

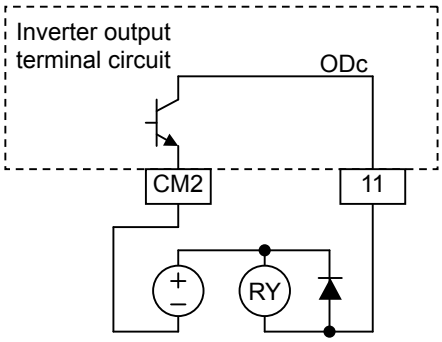

Example for terminal [AL0], [AL1], [AL2] (requires output configuration – see page 4-35 and 3-54):

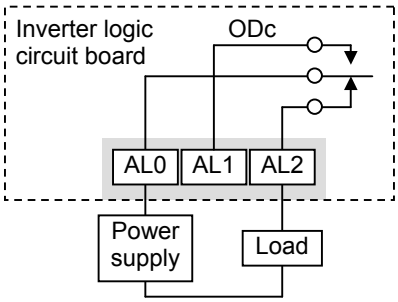

See I/O specs on page 4-6

Low Load Detection Signal

The Low Load Detection Signal output indicates the general status of the inverter output current. When the output current becomes less than the value specified by C039, the LOC output turns ON.

Option Code	Terminal Symbol	Function Name	State	Description
43	LOC	Low Load Detection	ON	when the output current becomes less than the value specified by C039
			OFF	when the output current is more than the value specified by C039

Valid for inputs:	11, AL0 – AL2
Required settings	C038, C039

Notes:

Example for terminal [11] (default output configuration shown – see page 3-54):

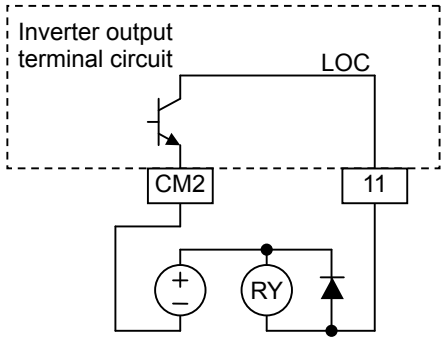

Example for terminal [AL0], [AL1], [AL2] (requires output configuration – see page 4-35 and 3-54):

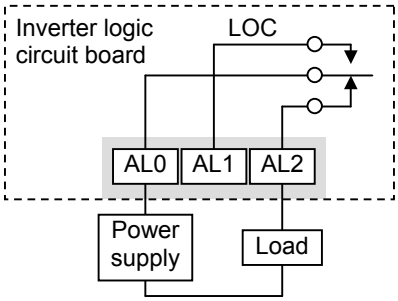

See I/O specs on page 4-6

Inverter Mounting and installation

Analog Input Operation

The X2002 inverters provide for analog input to command the inverter frequency output value. The analog input terminal group includes the [L], [OI], [O], and [H] terminals on the control connector, which provide for Voltage [O] or Current [OI] input. All analog input signals must use the analog ground [L].

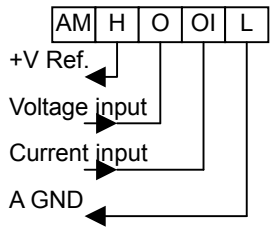

If you use either the voltage or current analog input, you must select one of them using the logic input terminal function [AT] analog type. Refer to the table on next page showing the activation of each analog input by combination of A005 set parameter and [AT] terminal condition. The [AT] terminal function is covered in "Analog Input Current/Voltage Select" on page 4–22. Remember that you must also set A001 = 01 to select analog input as the frequency source.

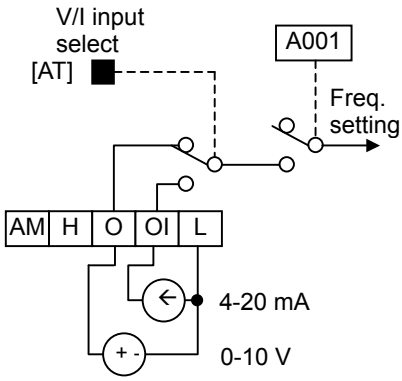

NOTE: If no logic input terminal is configured for the [AT] function, then inverter recognizes that [AT]=OFF.

Using an external potentiometer is a common way to control the inverter output frequency (and a good way to learn how to use the analog inputs). The potentiometer uses the built-in 10V reference [H] and the analog ground [L] for excitation, and the voltage input [O] for the signal. By default, the [AT] terminal selects the voltage input when it is OFF. Take care to use the proper resistance for the potentiometer, which is 1~2 kΩ, 2 Watts.

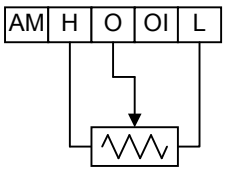

1 to 2kΩ, 2W

Voltage Input – The voltage input circuit uses terminals [L] and [O]. Attach the signal cable's shield wire only to terminal [L] on the inverter. Maintain the voltage within specifications (do not apply negative voltage).

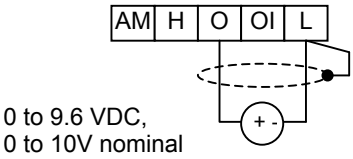

0 to 9.6 VDC,
0 to 10V nominal

Current Input – The current input circuit uses terminals [OI] and [L]. The current comes from a *sourcing* type transmitter; a *sinking* type will not work! This means the current must flow into terminal [OI], and terminal [L] is the return back to the transmitter. The input impedance from [OI] to [L] is 250 Ohms. Attach the cable shield wire only to terminal [L] on the inverter.

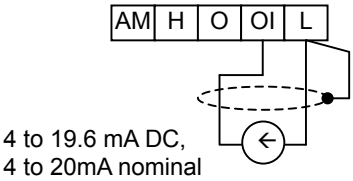

4 to 19.6 mA DC,
4 to 20mA nominal

See I/O specs on page 4-6.

The following table shows the available analog input settings. Parameter A005 and the input terminal [AT] determine the External Frequency Command input terminals that are available, and how they function. The analog inputs [O] and [OI] use terminal [L] as the reference (signal return).

A005	[AT] Input	Analog Input Configuration
02	ON	Keypad Pot
	OFF	[O]
03	ON	Keypad Pot
	OFF	[OI]
04	(ignored)	[O]
05	(ignored)	[OI]

NOTE: You cannot use [O] and [OI] inputs simultaneously on the X200₂ series inverter.

Other Analog Input-related topics:

- "Analog Input Settings" on page 3–13
- "Additional Analog Input Settings" on page 3–28
- "Analog Signal Calibration Settings" on page 3–61
- "Analog Input Current/Voltage Select" on page 4–22
- "ADD Frequency Enable" on page 4–30
- "Analog Input Disconnect Detect" on page 4–46

Analog Output Operation

In inverter applications it is useful to monitor the inverter operation from a remote location or from the front panel of an inverter enclosure. In some cases, this requires only a panel-mounted volt meter. In other cases, a controller such as a PLC may provide the inverter's frequency command, and require inverter feedback data (such as output frequency or output current) to confirm actual operation. The analog output terminal [AM] serves these purposes.

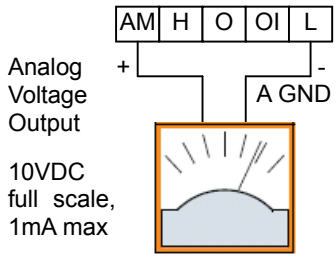

See I/O specs on page 4-6

The inverter provides an analog voltage output on terminal [AM] with terminal [L] as analog GND reference. The [AM] can output inverter frequency or current output value. Note that the voltage range is 0 to +10V (positive-going only), regardless of forward or reverse motor rotation. Use C028 to configure terminal [AM] as indicated below.

Func.	Code	Description	Range
C028	00	Inverter output frequency	0 ~ Max. Frequency (Hz)
	01	Inverter output current	0 ~ 200% of rated current

The [AM] signal offset and gain are adjustable, as indicated below.

Func.	Description	Range	Default
B080	[AM] output gain adjustment	0.~255.	100.
C086	[AM] output offset adjustment	0.0~10.0	0.0

The graph below shows the effect of the gain and offset setting. To calibrate the [AM] output for your application (analog meter), follow the steps below:

1. Run the motor at the full scale speed, or most common operating speed.
   a. If the analog meter represents output frequency, adjust offset (C086) first, and then use B080 to set the voltage for full scale output.
   b. If [AM] represents motor current, adjust offset (C086) first, and then use B080 to set the voltage for full scale output. Remember to leave room at the upper end of the range for increased current when the motor is under heavier loads.

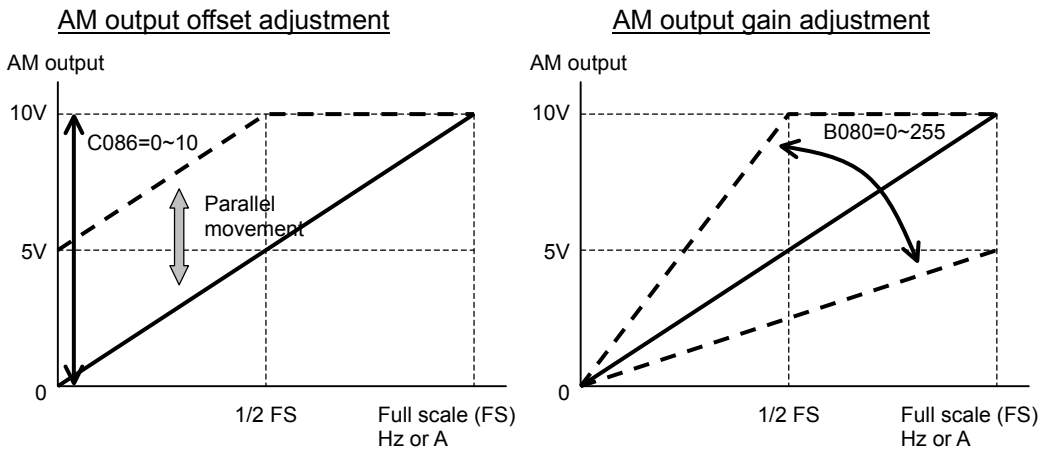

NOTE: As mentioned above, first adjust the offset, and then adjust the gain. Otherwise the required performance cannot be obtained because of the parallel movement of the offset adjustment.

PID Loop Operation

In standard operation, the inverter uses a reference source selected by parameter A001 for the output frequency, which may be a fixed value (F001), a variable set by the front panel potentiometer, or value from an analog input (voltage or current). To enable PID operation, set A071=01. This causes the inverter to *calculate* the target freq, or setpoint.

A calculated target frequency can have a lot of advantages. It lets the inverter adjust the motor speed to optimize some other process of interest, potentially saving energy as well. Refer to the figure below. The motor acts upon the external process. To control that external process, the inverter must monitor the process variable. This requires wiring a sensor to either the analog input terminal [O] (voltage) or terminal [OI] (current).

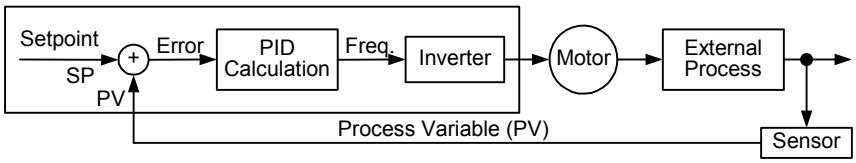

When enabled, the PID loop calculates the ideal output frequency to minimize the loop error. This means we no longer command the inverter to run at a particular frequency, but we specify the ideal value for the process variable. That ideal value is called the *setpoint*, and is specified in the units of the external process variable. For a pump application it may be gallons/minute, or it could be air velocity or temperature for an HVAC unit. Parameter A075 is a scale factor that relates the external process variable units to motor frequency. The figure below is a more detailed diagram of the function.

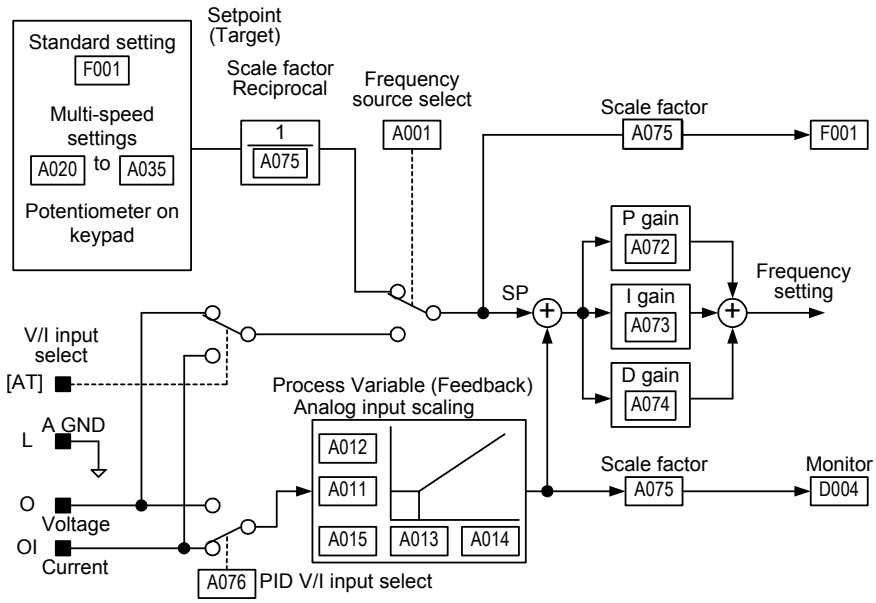

NOTE: You cannot use [O] and [OI] simultaneously. For example, if you select [OI] for the setpoint, it is not possible to use [O] for the Process Variable, and vice versa.

PID Loop Configuration

The inverter's PID loop algorithm is configurable for various applications.

PID Output Limit - The PID loop controller has a built-in output limit function. This function monitors the difference between the PID setpoint and the loop output (inverter output frequency), measured as a percentage of the full scale range of each. The limit is specified by parameter A078.

- When the difference |(Setpoint – loop output)| is smaller than or equal to the A078 limit value, the loop controller operates in its normal linear range.
- When the difference |(Setpoint – loop output)| is larger than the A078 limit value, the loop controller changes the output frequency as needed so that the difference does not exceed the limit.

The diagram below shows PID setpoint changes and the related output frequency behavior when a limit value in A078 exists.

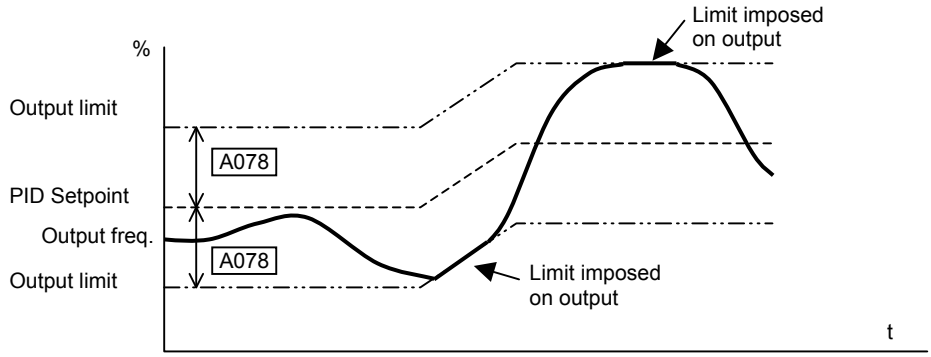

Error Inversion - In typical heating loops or ventilation loops, an increase in energy into the process results in an *increasing* PV. In this case, the Loop Error = (SP – PV). For cooling loops, an increase in energy into the process results in a *decreasing* PV. In this case, the Loop Error = –(SP – PV). Use A077 to configure the error term.

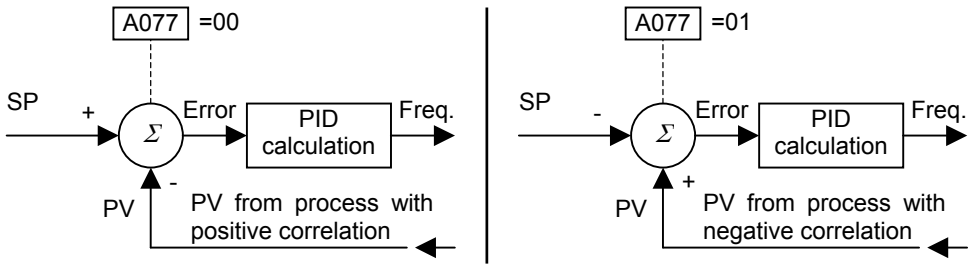

Other PID-related topics:

- "PID Control" on page 3–22
- "PID ON/OFF and PID Clear" on page 4–26
- "Output Deviation for PID Control" on page 4–43
- "PID Second Stage Output" on page 4–47

Configuring the Inverter for Multiple Motors

Simultaneous Connections

For some applications, you may need to connect two or more motors (wired in parallel) to a single inverter's output. For example, this is common in conveyor applications where two separate conveyors need to have approximately the same speed. The use of two motors may be less expensive than making the mechanical link for one motor to drive multiple conveyors.

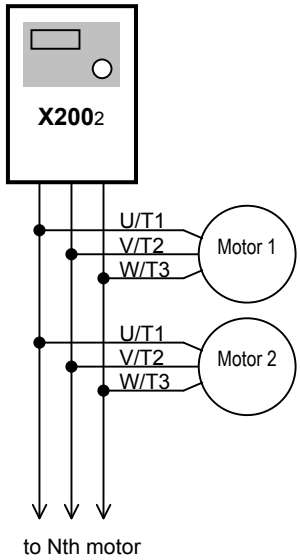

Some of the characteristics of using multiple motors with one drive are:

- The inverter output must be rated to handle the sum of the currents from the motors.
- You must use separate thermal protection switches or devices to protect each motor. Locate the device for each motor inside the motor housing or as close to it as possible.
- The wiring for the motors must be permanently connected in parallel (do not remove one motor from the circuit during operation).

NOTE: The motor speeds are identical only in theory. That is because slight differences in their loads will cause one motor to slip a little more than another, even if the motors are identical. Therefore, do not use this technique for multi-axis machinery that must maintain a fixed position reference between its axes.

Inverter Configuration for Two Motor Types

Some equipment manufacturers may have a single type of machine that has to support two different motor types—and only one motor will be connected at a time. For example, an OEM may sell basically the same machine to the US market and the European market. Some reasons why the OEM needs two motor profiles are:

- The inverter power input voltage is different for these markets.
- The required motor type is also different for each destination.

In other cases, the inverter needs two profiles because the machine characteristics vary according to these situations:

- Sometimes the motor load is very light and can move fast. Other times the motor load is heavy and must move slower. Using two profiles allows the motor speed, acceleration and deceleration to be optimal for the load and avoid inverter trip (fault) events.
- Sometimes the slower version of the machine does not have special braking options, but a higher performance version does have braking features.

Having two motor profiles lets you store two “personalities” for motors in one inverter’s memory. The inverter allows the final selection between the two motor types to be made in the field through the use of an intelligent input terminal function [SET]. This provides an extra level of flexibility needed in particular situations. See the following table.

Parameters for the second motor have a function code of the form x2xx. They appear immediately after the first motor’s parameter in the menu listing order. The following table lists the parameters that have the second parameter register for programming.

Function Name	Parameter Codes	
	1st motor	2nd motor
Multi-speed frequency setting	A020	A220
Acceleration (1) time setting	F002	F202
Deceleration (1) time setting	F003	F203
Frequency source setting	A001	A201
Run command source setting	A002	A202
Base frequency setting	A003	A203
Maximum frequency setting	A004	A204
Multi-speed frequency setting	A020	A220
Torque boost select	A041	A241
Manual torque boost value	A042	A242
Manual torque boost frequency adjustment	A043	A243
V/f characteristic curve selection	A044	A244
V/f gain setting	A045	A245
Frequency upper limit setting	A061	A261
Frequency lower limit setting	A062	A262
Acceleration (2) time setting	A092	A292
Deceleration (2) time setting	A093	A293
Select method to use Acc2/Dec2	A094	A294
Acc 1 to Acc 2 frequency transition point	A095	A295
Dec 1 to Dec 2 frequency transition point	A096	A296
Level of electronic thermal setting	B012	B212
Electronic thermal characteristic	B013	B213
Overload restriction operation mode	B021	B221
Overload restriction level setting	B022	B222
Deceleration rate at overload restriction	B023	B223
Source of overload restriction selection	B028	B228
Terminal [1] function	C001	C201
Terminal [2] function	C002	C202
Terminal [3] function	C003	C203
Terminal [4] function	C004	C204
Terminal [5] function	C005	C205
Overload level setting	C041	C241
Motor capacity	H003	H203
Motor poles setting	H004	H204
Motor stabilization constant	H006	H206

CALL NOW 800-985-6929 http://www.automatedpt.com Email: charles@aut

Inverter System Accessories

5

In This Chapter… **page**

- **Introduction** 2
- **Component Description** 3
- **Dynamic Braking** 5

CALL NOW 800-985-6929 http://www.automatedpt.com Email: charles@automatedpt.com

Introduction

Introduction

A motor control system will obviously include a motor and inverter, as well as fuses for safety. If you are connecting a motor to the inverter on a test bench just to get started, that's all you may need for now. But a fully developed system can also have a variety of additional components. Some can be for noise suppression, while others may enhance the inverter's braking performance. The figure below shows a system with several possible optional components, and the table gives part number information.

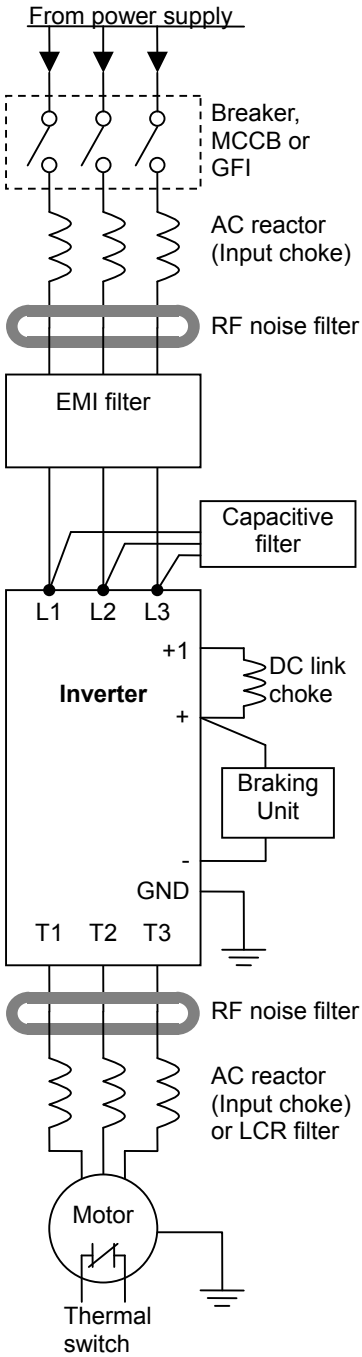

Name	Part No. Series		See page
	EU, Japan	USA	
AC reactor, input side	ALI-xxx2	HRL-x	5-3
RF noise filter, input side	ZCL-xxx	ZCL-xxx	5-4
EMI filter (for CE)	FFL100-xxx	FFL100-xxx	5-4
Capacitive filter	CFI-x	CFI-x	5-4
DC link choke	DCL-x-xx	HDC-xxx	5-5
Braking resistor	JRB-xxx-x SRB-xxx-x	JRB-xxx-x SRB-xxx-x	5-5
Braking resistor NEMA-rated	–	HRB-x, NSRBx00-x NJRB-xxx	5-5
Braking unit	BRD-xxx	BRD-xxx	5-5
RF noise filter, output side	ZCL-xxx	ZCL-xxx	5-4
AC reactor, output side	ACL-x2-xxx	HRL-xxx	5-3
LCR filter	Combination: ACL-x2-xxx LPF-xxx R-2-xxx	HRL-xxC	5-3

NOTE: The Hitachi part number series for accessories includes different sizes of each part type, specified by the –x suffix. Hitachi product literature can help match size and rating of your inverter to the proper accessory size.

Each inverter accessory comes with its own printed instruction manual. Please refer to those manuals for complete installation details. This chapter gives only an overview of these optional system devices.

Component Descriptions

AC Reactors, Input Side

This is useful in suppressing harmonics induced on the power supply lines, or when the main power voltage imbalance exceeds 3% (and power source capacity is more than 500 kVA), or to smooth out line fluctuations. It also improves the power factor.

In the following cases for a general-purpose inverter, a large peak current flows on the main power supply side, and is able to destroy the inverter module:

- If the unbalanced factor of the power supply is 3% or higher
- If the power supply capacity is at least 10 times greater than the inverter capacity (the power supply capacity is 500 kVA or more)
- If abrupt power supply changes are expected

Examples of these situations include:

1. Several inverters are connected in parallel, sharing the same power bus
2. A thyristor converter and an inverter are connected in parallel, sharing the same power bus
3. An installed phase-advance (power factor correction) capacitor opens and closes

Where these conditions exist or when the connected equipment must be highly reliable, you MUST install an input-side AC reactor of 3% (at a voltage drop at rated current) with respect to the supply voltage on the power supply side. Also, where the effects of an indirect lightning strike are possible, install a lightning conductor.

Example calculation:

V_{RS} = 205V, V_{ST} = 203V, V_{TR} = 197V,

where V_{RS} is R-S line voltage, V_{ST} is S-T line voltage, V_{TR} is T-R line voltage

Unbalance factor of voltage =

$$\frac{Max.\ \ line\ \ voltage(\min.) - Mean\ \ Line\ \ voltage}{Meanline\ \ voltage} \times 100$$

$$= \frac{V_{RS} - \left(V_{RS} + V_{ST} + V_{TR}\right)/3}{\left(V_{RS} + V_{ST} + V_{TR}\right)/3} \times 100 = \frac{205 - 202}{202} \times 100 = 1.5\%$$

Please refer to the documentation that comes with the AC reactor for installation instructions.

AC Reactors, Output Side

This reactor reduces the vibrations in the motor caused by the inverter's switching waveforms, by smoothing the waveforms to approximate commercial power quality. It is also useful to reduce the reflected voltage wave phenomenon when wiring from the inverter to the motor is more than 10m in length. Please refer to the documentation that comes with the AC reactor for installation instructions.

Zero-phase Reactor (RF Noise Filter)

The zero-phase reactor helps reduce radiated noise from the inverter wiring. It can be used on the input or output side of the inverter. The example zero-phase reactor shown to the right comes with a mounting bracket. The wiring must go through the opening to reduce the RF component of the electrical noise. Loop the wires three times (four turns) to attain the full RF filtering effect. For larger wire sizes, place multiple zero-phase reactors (up to four) side-by-side for a greater filtering effect.

ZCL–xxx

EMI Filter

The EMI filter reduces the conducted noise on the power supply wiring generated by the inverter. Connect the EMI filter to the inverter primary (input side). The FFL100 series filter is required for compliance to the EMC Class A directive (Europe) and C-TICK (Australia). See "CE–EMC Installation Guidelines" on page D–2.

WARNING: The EMI filter has high internal leakage current from power wiring to the chassis. Therefore, connect the chassis ground of the EMI filter before making the power connections to avoid danger of shock or injury.

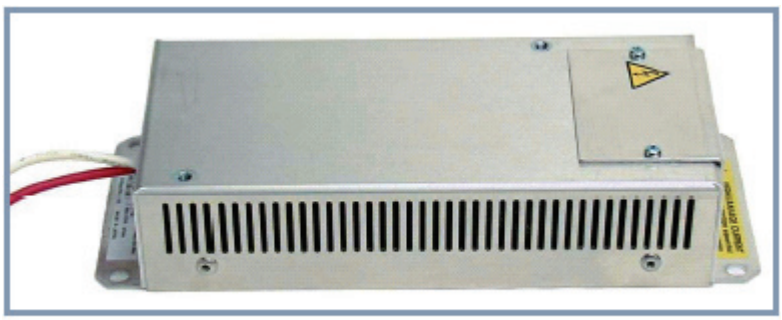

FFL100–xxx

NOTE: European version of X2002 series have integrated EMC filter as standard. It is EN61800-3 category C1 for 200V class models (-SFEF2 models), and EN61800-3 category C2 for 400V class models (-HFEF2 models).

RF Noise Filter (Capacitive)

This capacitive filter reduces radiated noise from the main power wires in the inverter input side. This filter is not for achieving CE compliance and is applicable to the input side only of the inverter. It comes in two versions—for 200V class inverters or 400V class inverters. Please refer to the documentation that comes with the radio noise filter for installation instructions.

DC Link Choke

The DC choke (reactor) suppresses harmonics generated by the inverter. It attenuates the high-frequency components on the inverter's internal DC bus (link). However, note that it does not protect the diode rectifiers in the inverter input circuit.

Dynamic Braking

Introduction

The purpose of dynamic braking is to improve the ability of the inverter to stop (decelerate) the motor and load. This becomes necessary when an application has some or all of the following characteristics:

- High load inertia compared to the available motor torque
- The application requires frequent or sudden changes in speed
- System losses are not great enough to slow the motor as needed

When the inverter reduces its output frequency to decelerate the load, the motor can temporarily become a generator. This occurs when the motor rotation frequency is higher than the inverter output frequency. This condition can cause the inverter DC bus voltage to rise, resulting in an over-voltage trip. In many applications, the over-voltage condition serves as a warning signal that we have exceeded the deceleration capabilities of the system. The X2002 inverter can connect to an external braking unit, which sends the regenerative energy from the motor during deceleration to the optional braking resistor(s). The dynamic braking resistor serves as a load, developing heat to stop the motor just as brakes on an automobile develop heat during braking.

A switching circuit and power resistor are the main components of the dynamic braking unit that includes a fuse and thermally activated alarm relay for safety. However, be careful to avoid overheating its resistor. The fuse and thermal relay are safeguards for extreme conditions, but the inverter can maintain braking usage in a safe zone.

Dynamic Braking Usage

Dynamic braking usage must follow guidelines to avoid overheating. The timing diagram to the right shows the output frequency versus time. Dynamic braking is in effect during the deceleration ramp, and has the following constraints:

- Dynamic braking maximum duty cycle = 10%, where Tb/Tc ≤ 0.1 sec.

Dynamic braking maximum continuous ON time Tb ≤ 10 sec.

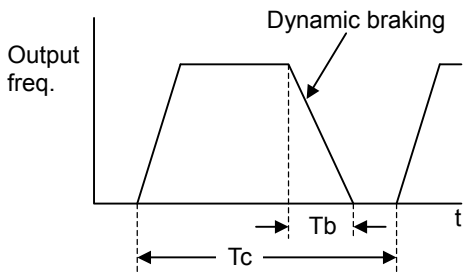

Selecting Braking Resistors for External Braking Units

200V Class Inverters – The following tables specify the braking options for 200V class X2002 inverters and the braking torque for each option. You can connect a single braking unit to the inverter, or two braking units for additional stopping torque.

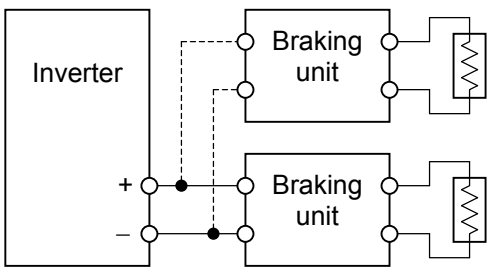

Use one BRD-E3 braking unit for the braking torque listed in the following table.

Note the column meanings in the tables:

- Column "A" = Average braking torque from 60Hz to 3Hz.
- Column "B" = Average braking torque from 120Hz to 3Hz.

X200₂ Inverter 200V Models			Braking Torque with BRD-E3 Braking Unit							
Model Number	HP	Braking torque without braking unit	Using built-in resistor only		External resistor added					
					HRB1		HRB2		HRB3	
			A	B	A	B	A	B	A	B
002SFEF2/NFU2	1/4	50%	150%	120%						
004SFEF2/NFU2	1/2	50%	150%	120%						
005SFEF2	3/4	50%	150%	120%						
007SFEF2/NFU2	1	50%	100%	80%	150%	120%				
011SFEF2	1.5	50%	60%	60%	100%	80%				
015SFEF2/NFU2	2	50%	50%	50%	100%	80%				
022SFEF2/NFU2	3	20%	50%	50%	100%	80%				
037LFU2	5	20%	40%	40%	60%	60%	100%	100%	150%	120%
055LFU2	7.5	20%	30%	30%	50%	50%	70%	70%	100%	80%
075LFU2	10	20%	20%	20%	40%	40%	50%	50%	80%	80%

Connect a second braking unit in parallel for additional braking torque listed in the following table.

X200₂ Inverter 200V Models			Braking Torque with BRD-E3 Braking Unit							
Model Number	HP	Braking torque without braking unit	Using built-in resistor only		External resistor added					
					HRB1		HRB2		HRB3	
			A	B	A	B	A	B	A	B
002SFEF2/NFU2	1/4	50%	150%	120%						
004SFEF2/NFU2	1/2	50%	150%	120%						
005SFEF2	3/4	50%	150%	120%						
007SFEF2/NFU2	1	50%	150%	120%						
011SFEF2	1.5	50%	100%	80%						
015SFEF2/NFU2	2	50%	100%	80%						
022SFEF2/NFU2	3	20~40%	70%	70%	150%	120%				
037LFU2	5	20~40%	50%	50%	110%	90%				
055LFU2	7.5	20%	30%	30%	80%	80%	100%	100%	150%	150%
075LFU2	10	20%	30%	30%	60%	60%	80%	80%	100%	100%

400V Class Inverters – The following tables specify the braking options for 400V class X2002 inverters and the braking torque for each option. You can connect a single braking unit to the inverter, or two braking units for additional braking torque.

Use one BRD-EZ3 braking unit for the braking torque listed in the following table.

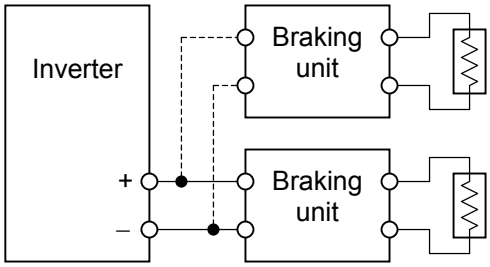

X2002 Inverter 400V Models			Braking Torque with BRD-EZ3 Braking Unit							
Model Number	HP	Braking torque without braking unit	Using built-in resistor only		External resistor added					
					HRB1 x (2)		HRB2 x (2)		HRB3 x (2)	
			A	B	A	B	A	B	A	B
004HFEF2/HFU2	1/2	50%	150%	150%						
007HFEF2/HFU2	1	50%	150%	150%						
015HFEF2/HFU2	2	50%	100%	100%						
022HFEF2/HFU2	3	20%	60%	60%						
030HFEF2	4	20%	50%	50%	150%	150%				
040HFEF2/HFU2	5	20%	40%	40%	130%	130%	150%	150%		
055HFEF2/HFU2	7.5	20%	30%	30%	100%	100%	130%	130%		
075HFEF2/HFU2	10	20%	20%	20%	70%	70%	100%	100%		

Connect a second braking unit in parallel for additional braking torque listed in the following table.

X2002 Inverter 400V Models			Braking Torque with BRD-EZ3 Braking Unit							
Model Number	HP	Braking torque without braking unit	Using built-in resistor only		External resistor added					
					HRB1 x (2)		HRB2 x (2)		HRB3 x (2)	
			A	B	A	B	A	B	A	B
004HFEF2/HFU2	1/2	50%	150%	150%						
007HFEF2/HFU2	1	50%	150%	150%						
015HFEF2/HFU2	2	50%	150%	150%						
022HFEF2/HFU2	3	20%	130%	130%						
030HFEF2	4	20%	100%	100%						
040HFEF2/HFU2	5	20%	70%	70%						
055HFEF2/HFU2	7.5	20%	50%	50%	150%	150%				
075HFEF2/HFU2	10	20%	40%	40%	140%	140%				

Troubleshooting and Maintenance

6

In This Chapter… page

- Troubleshooting 2
- Monitoring Trip Events, History, & Conditions 5
- Restoring Factory Default Settings 8
- Maintenance and Inspection 9
- Warranty 16

Troubleshooting

Safety Messages

Please read the following safety messages before troubleshooting or performing maintenance on the inverter and motor system.

WARNING: Wait at least five (5) minutes after turning OFF the input power supply before performing maintenance or an inspection. Otherwise, there is the danger of electric shock.

WARNING: Make sure that only qualified personnel will perform maintenance, inspection, and part replacement. Before starting to work, remove any metallic objects from your person (wristwatch, bracelet, etc.). Be sure to use tools with insulated handles. Otherwise, there is a danger of electric shock and/or injury to personnel.

WARNING: Never remove connectors by pulling on its wire leads (wires for cooling fan and logic P.C.board). Otherwise, there is a danger of fire due to wire breakage and/or injury to personnel.

General Precautions and Notes

- Always keep the unit clean so that dust or other foreign matter does not enter the inverter.
- Take special care in regard to breaking wires or making connection mistakes.
- Firmly connect terminals and connectors.
- Keep electronic equipment away from moisture and oil. Dust, steel filings and other foreign matter can damage insulation, causing unexpected accidents, so take special care.

Inspection Items

This chapter provides instructions or checklists for these inspection items:

- Daily inspection
- Periodical inspection (approximately once a year)
- Insulation resistance test

Troubleshooting Tips

The table below lists typical symptoms and the corresponding solution(s).

Symptom/condition		Probable Cause	Solution
The motor will not run	The inverter outputs [U], [V], [W] are not supplying voltage	• Is the frequency command source A001 parameter setting correct? • Is the Run command source A002 parameter setting correct?	• Make sure the parameter setting A001 is correct • Make sure the parameter setting A002 is correct
		• Is power being supplied to terminals [L1], [L2], and [L3/N]? If so, the POWER lamp should be ON.	• Check terminals [L1], [L2], and [L3/N], then [U/T1], [V/T2], and [W/T3]. • Turn ON the power supply or check fuses.
		• Is there an error code E XX displayed?	• Press the Func. key and determine the error type. Eliminate the error cause, then clear the error (Reset).
		• Are the signals to the intelligent input terminals correct? • Is the Run Command active? • Is the [FW] terminal (or [RV]) connected to [PCS] (via switch, etc.)	• Verify the terminal functions for C001–C005 are correct. • Turn ON Run Command enable. • Supply 24V to [FW] or [RV] terminal, if configured.
		• Has the frequency setting for F001 been set greater than zero? • Are the control circuit terminals [H], [O], and [L] connected to the potentiometer?	• Set the parameter for F001 to a safe, non-zero value. • If the potentiometer is the frequency setting source, verify voltage at [O] > 0V.
		• Is the RS (reset) function or FRS (free-run stop) function ON?	• Turn OFF the command(s)
	Inverter outputs [U], [V], [W] are supplying voltage.	• Is the motor load too heavy?	• Reduce the load, and test the motor independently.
	The optional remote operator is used (SRW).	• Are the operational settings between the remote operator and the inverter unit correct?	• Check the operator type setting.
The direction of the motor is reversed		• Are the connections of output terminals [U/T1], [V/T2], and [W/T3] correct? • Is the phase sequence of the motor forward or reverse with respect to [U/T1], [V/T2], and [W/T3]?	• Make connections according to the phase sequence of the motor. In general: FWD = U-V-W, and REV=U-W-V.
		• Are the control terminals [FW] and [RV] wired correctly? • Is parameter F004 properly set?	• Use terminal [FW] for forward, and [RV] for reverse. • Set motor direction in F004.

Symptom/condition		Probable Cause	Solution
The motor speed will not reach the target frequency (desired speed).		• If using the analog input, is the current or voltage at [O] or [OI]?	• Check the wiring. • Check the potentiometer or signal generating device.
		• Is the load too heavy?	• Reduce the load. • Heavy loads activate the overload restriction feature (reduces output as needed).
		• Is the inverter internally limiting the output frequency?	• Check max frequency setting (A004) • Check frequency upper limit setting (A061)
The rotation is unstable		• Is the load fluctuation too great? • Is the supply voltage unstable? • Is the problem occurring at a particular frequency?	• Increase the motor capacity (both inverter and motor). • Fix power supply problem. • Change the output frequency slightly, or use the jump frequency setting to skip the problem frequency.
The RPM of the motor does not match the inverter output frequency setting.		• Is the maximum frequency setting A004 correct? • Does the monitor function D001 display the expected output frequency?	• Verify the V/f settings match motor specifications. • Make sure all scaling (such as A011 to A014) is properly set.
Inverter data us not correct	No download has occurred	• Was power turned OFF after a parameter edit but before pressing the Store key?	• Edit the data and press the Store key once.
		• Edits to data are permanently stored at power down. Was the time from power OFF to power ON less than six seconds?	• Wait six seconds or more before turning power OFF after editing data.
	The download to the inverter was attempted	• Was the power turned OFF within six seconds after the display changed from REMT to INV?	• Copy the data to the inverter again, and keep power ON for six seconds or more after copying.
A parameter will not change after an edit (reverts to old setting).	True for certain parameters	• Is the inverter in Run Mode? Some parameters cannot be edited during Run Mode.	• Put inverter in Stop Mode (press the Stop/reset key). Then edit the parameter.
	True for all parameters	• If you're using the [SFT] intelligent input (software lock function)—is the [SFT] input ON?	• Change the state of the SFT input, and check the B031 parameter (SFT mode).

Monitoring Trip Events, History, & Conditions

Fault Detection and Clearing

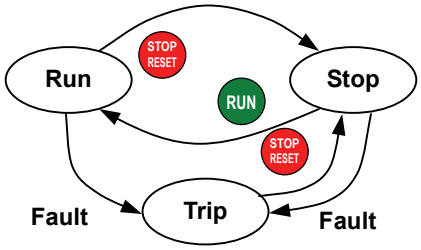

The microprocessor in the inverter detects a variety of fault conditions and captures the event, recording it in a history table. The inverter output turns OFF, or "trips" similar to the way a circuit breaker trips due to an over-current condition. Most faults occur when the motor is running (refer to the diagram to the right). However, the inverter could have an internal fault and trip in Stop Mode. In either case, you can clear the fault by pressing the Stop/Reset key. Additionally, you can clear the inverter's cumulative trip history by performing the procedure "Restoring Factory Default Settings" on page 6–8 (setting B084=00 will clear the trip history but leave inverter settings intact).

Error Codes

An error code will appear on the display automatically when a fault causes the inverter to trip. The following table lists the cause associated with the error.

Error Code	Name	Cause(s)
E 01	Over-current event while at constant speed	The inverter output was short-circuited, or the motor shaft is locked or has a heavy load. These conditions cause excessive current for the inverter, so the inverter output is turned OFF. The dual-voltage motor is wired incorrectly.
E 02	Over-current event during deceleration	
E 03	Over-current event during acceleration	
E 04	Over-current event during other conditions	
E 05	Overload protection	When a motor overload is detected by the electronic thermal function, the inverter trips and turns OFF its output.
E 07	Over-voltage protection	When the DC bus voltage exceeds a threshold, due to regenerative energy from the motor.
E 08	EEPROM error	When the built-in EEPROM memory has problems due to noise or excessive temperature, the inverter trips and turns OFF its output to the motor. The error can also happen when the switch S8 is operated before the display goes off at power off.
E 09	Under-voltage error	A decrease of internal DC bus voltage below a threshold results in a control circuit fault. This condition can also generate excessive motor heat or cause low torque. The inverter trips and turns OFF its output.
E 11	CPU error	A malfunction in the built-in CPU has occurred, so the inverter trips and turns OFF its output to the motor.
E 12	External trip	A signal on an intelligent input terminal configured as EXT has occurred. The inverter trips and turns OFF the output to the motor.

Error Code	Name	Cause(s)
E 13	USP	When the Unattended Start Protection (USP) is enabled, an error occurred when power is applied while a Run signal is present. The inverter trips and does not go into Run Mode until the error is cleared.
E 14	Ground fault	The inverter is protected by the detection of ground faults between the inverter output and the motor upon during powerup tests. This feature protects the inverter, and does not protect humans.
E 15	Input over-voltage	The inverter tests for input over-voltage after the inverter has been in Stop Mode for 100 seconds. If an over-voltage condition exists, the inverter enters a fault state. After the fault is cleared, the inverter can enter Run Mode again.
E 21	Inverter thermal trip	When the inverter internal temperature is above the threshold, the thermal sensor in the inverter module detects the excessive temperature of the power devices and trips, turning the inverter output OFF.
E 30	Driver error	An internal inverter error has occurred at the safety protection circuit between the CPU and main driver unit. Excessive electrical noise may be the cause. The inverter has turned OFF the IGBT module output.
E 35	Thermistor	When a thermistor is connected to terminals [5] and [L] and the inverter has sensed the temperature is too high, the inverter trips and turns OFF the output.
E 37	Safe Stop	Safe stop signal is given.
E 60	Communications error	The inverter's watchdog timer for the communications network has timed out.
----	Communication error (Upper segment)	Following communication error causes this indication when using an optional operator. ● Incorrect position of Switch 7 (see section 2 for the switch description) ● Communication itself has some problem (Operator, RS485, communication cable, etc.)
----	Under-voltage (brownout) with output shutoff (Center segment)	Due to low input voltage, the inverter turns its output OFF and tries to restart. If it fails to restart, then the alarm trips to record the under-voltage error event.

NOTE: If an EEPROM error (E08) occurs, be sure to confirm the parameter data values are still correct. If the power is turned OFF while the [RS] (Reset) intelligent input terminal is ON, an EEPROM error will occur when power is restored.

Trip History and Inverter Status

We recommend that you first find the cause of the fault before clearing it. When a fault occurs, the inverter stores important performance data at the moment of the fault. To access the data, use the monitor functions (Dxxx) and select D081 for details about the present fault (En). The previous two faults are stored in D082 and D083, with D(En-1 and En-2). Each error shifts D081–D082 to D082–D083, and writes the new error to D081.

The following Monitor Menu map shows how to access the error codes. When fault(s) exist, you can review their details by first selecting the proper function: D081 is the most recent, and D083 is the oldest.

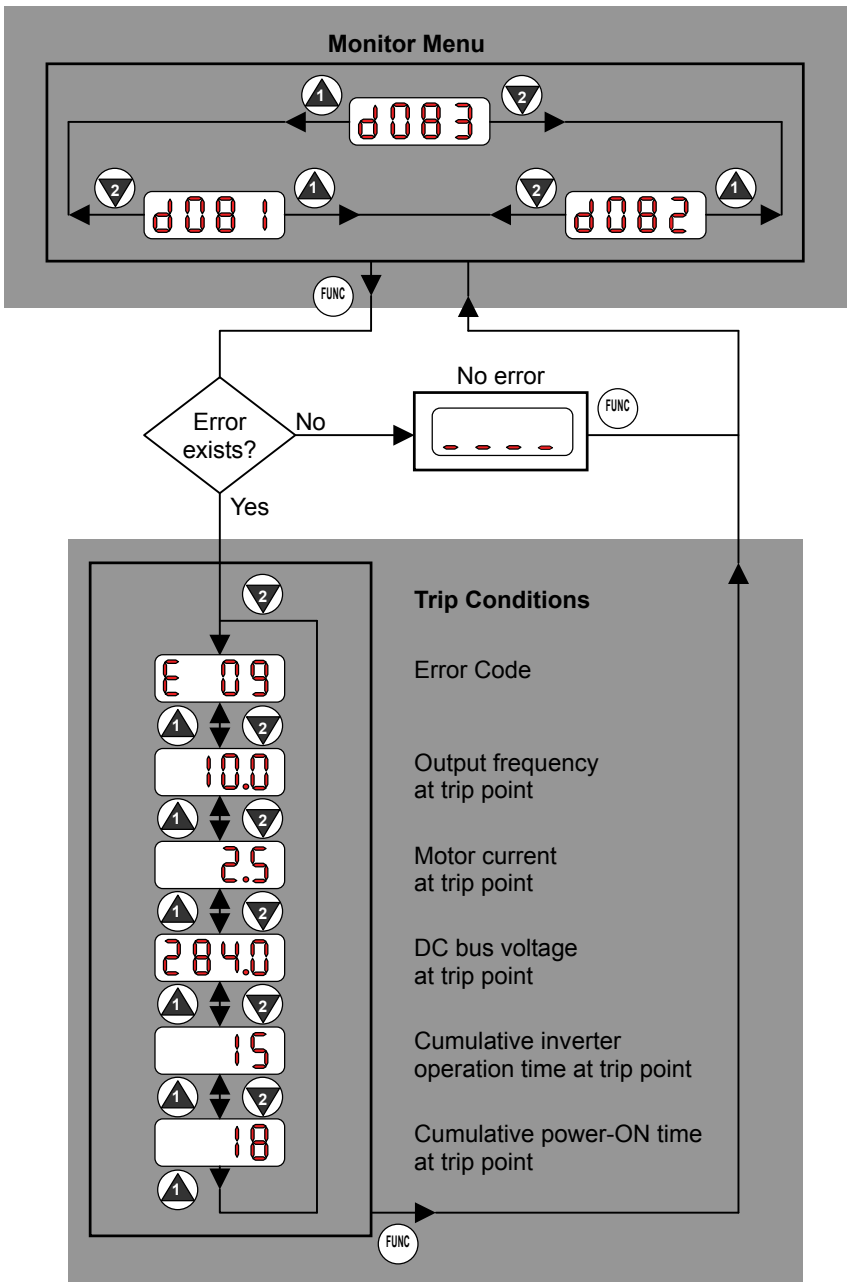

Restoring Factory Default Settings

You can restore all inverter parameters to the original factory (default) settings for the intended country of use. After initializing the inverter, use the powerup test in Chapter 2 to get the motor running again. To initialize the inverter, follow the steps below.

No.	Action	Display	Func./Parameter
1	Use the FUNC, ▲1, and ▼2 keys to navigate to the "B" Group.	b---	"B" Group selected
2	Press the FUNC key.	b001	First "B" parameter selected.
3	Press and hold the ▲1 key until →	b085	Country code for initialization selected
4	Press the FUNC key.	02	00=Japan, 01=Europe 02=USA
5	Confirm the country code is correct. Do not change it unless you are absolutely sure the power input voltage range and frequency matches the country code setting. To change the country code, press ▲1 or ▼2 to set, STR to store.		
6	Press the FUNC key.	b085	Country code for initialization selected
7	Press the ▼2 key.	b084	Initialization function selected
8	Press the FUNC key.	00	00=initialization disabled, clear trip history only
9	Press the ▲1 key.	01	01=initialization enabled
10	Press the STR key.	b084	Initialization now enable to restore all defaults
11	Press and hold the FUNC, ▼2 and STOP RESET keys. Do not release yet.	b084	First part of special key sequence
12	When your country code appears in the display, release all the keys.	EU USA JP	Default parameter country code shown during initialization process (left-most char displays alternating pattern)
13	Initialization is complete	d001	Function code for output frequency monitor shown

NOTE: Initialization cannot be performed with a remote operator panel. Disconnect the dovice and use the inverter's front keypad.

Maintenance and Inspection

Monthly and Yearly Inspection Chart

Item Inspected		Check for…	Inspection Cycle		Inspection Method	Criteria
			Month	Year		
Overall	Ambient environment	Extreme temperatures & humidity	✓		Thermometer, hygrometer	Ambient temperature between – 10 to 40°C, non-condensing
	Major devices	Abnormal noise & vib.	✓		Visual and aural	Stable environment for electronic controls
	Power supply voltage	Voltage tolerance	✓		Digital volt meter, measure between inverter terminals [L1], [L2], [L3]	200V class: 200 to 240V 50/60 Hz 400V class: 380 to 460V 50/60 Hz
Main circuit	Ground Insulation	Adequate resistance		✓	Digital volt meter, GND to terminals	5 MΩ or greater
	Mounting	No loose screws		✓	Torque wrench	M3: 0.5 – 0.6 Nm M4: 0.98 – 1.3 Nm M5: 1.5 – 2.0 Nm
	Components	Overheating		✓	Thermal trip events	No trip events
	Housing	Dirt, dust		✓	Visual	No abnormalities
	Terminal block	Secure connections		✓	Visual	No abnormalities
	Smoothing capacitors	Leaking, swelling	✓		Visual	No abnormalities
	Relay(s)	Chattering		✓	Aural	Single click when switching ON or OFF
	Resistors	Cracks or discoloring		✓	Visual	Check Ohms of optional braking res.
	Cooling fan	Noise	✓		Power down, manually rotate	Rotation must be smooth
		Dust	✓		Visual	Vacuum to clean
Control circuit	Overall	No odor, discoloring, corrosion		✓	Visual	No abnormalities
	Capacitor	No leaks or deformation			Visual	Undistorted appearance
Display	LEDs	Legibility			Visual	All LED segments work

Note 1: The life of a capacitor is affected by the ambient temperature. See "Capacitor Life Curve" on page 6–11.

Note 2: The inverter must be cleaned periodically. If dust accumulates on the fan and heat sink, it can cause overheating of the inverter.

Megger test

The *megger* is a piece of test equipment that uses a high voltage to determine if an insulation degradation has occurred. For inverters, it is important that the power terminals be isolated from the Earth GND terminal via the proper amount of insulation.

The circuit diagram below shows the inverter wiring for performing the megger test. Just follow the steps to perform the test:

1. Remove power from the inverter and wait at least 5 minutes before proceeding.
2. Open the front housing panel to access the power wiring.
3. Remove all wires to terminals [R/L1, S/L2, T/L3(N), +1, +, –, U/T1, V/T2, and W/T3]. Most importantly, the input power and motor wires will be disconnected from the inverter.
4. Use a bare wire and short terminals [R/L1, S/L2, T/L3(N), +1,+, –, U/T1, V/T2, and W/T3] together as shown in the diagram.
5. Connect the megger to the inverter Earth GND and to the shorted power terminals as shown. Then perform the megger test at 500 VDC and verify 5MΩ or greater resistance.

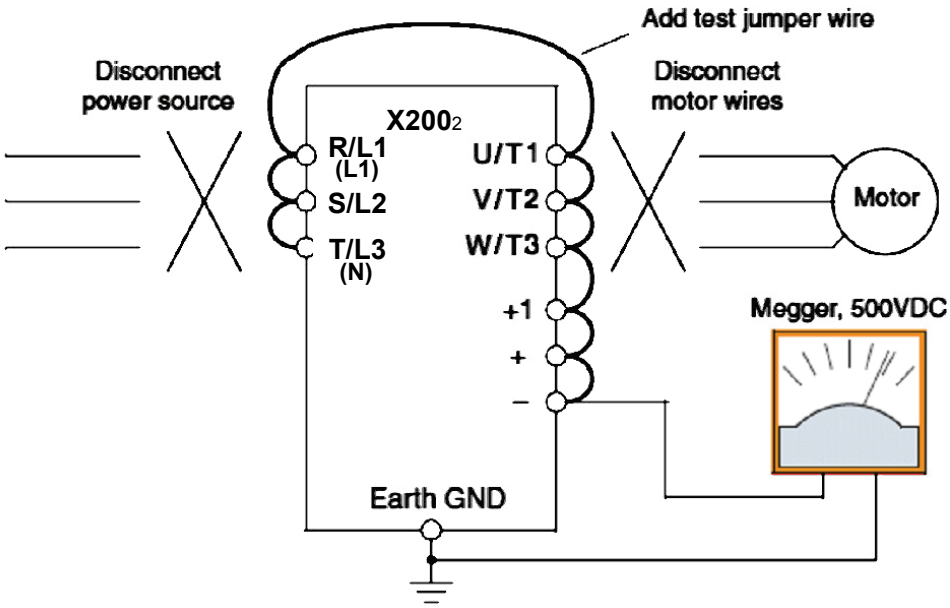

6. After completing the test, disconnect the megger from the inverter.
7. Reconnect the original wires to terminals [R/L1, S/L2, T/L3(N), +1, +, –, U/T1, V/T2, and W/T3].

CAUTION: Do not connect the megger to any control circuit terminals such as intelligent I/O, analog terminals, etc. Doing so could cause damage to the inverter.

CAUTION: Never test the withstand voltage (HIPOT) on the inverter. The inverter has a surge protector between the main circuit terminals above and the chassis ground.

CAUTION: Power terminal assignment is different compared to old models such as L100, L200 series, etc,. Pay attention when wiring the power cable.

Spare parts

We recommend that you stock spare parts to reduce down time, including these parts:

Part description	Symbol	Quantity		Notes
		Used	Spare	
Cooling fan	FAN	1	1	015S, 022S, 015N, 022N, 015L to 075L 015H to 075H
Case	CV	1	1	• Housing cover • Main case • Terminal covers

Capacitor Life Curves

The DC bus inside the inverter uses a large capacitor as shown in the diagram below. The capacitor handles high voltage and current as it smoothes the power for use by the inverter. So, any degradation of the capacitor will affect the performance of the inverter.

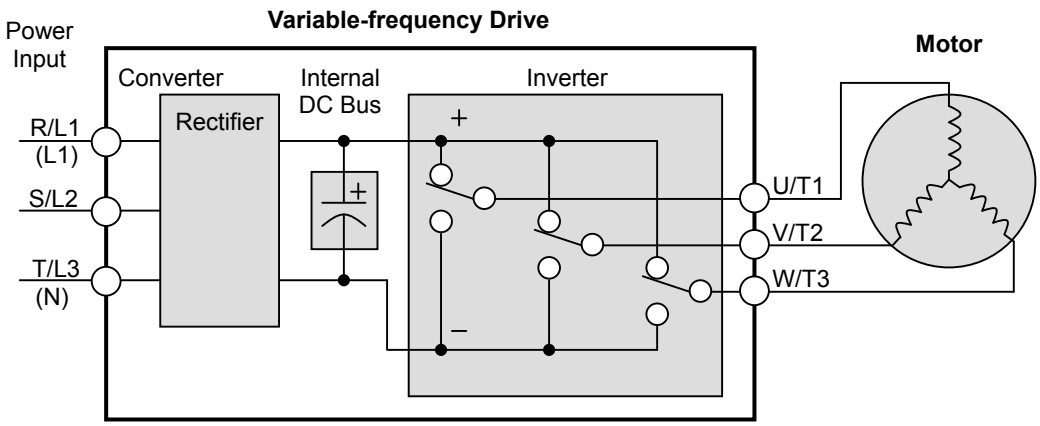

Capacitor life is reduced in higher ambient temperatures, as the graph below demonstrates. Be sure to keep the ambient temperature at acceptable levels, and perform maintenance inspections on the fan, heat sink, and other components. If the inverter is installed on a cabinet, the ambient temperature is the temperature inside the cabinet.

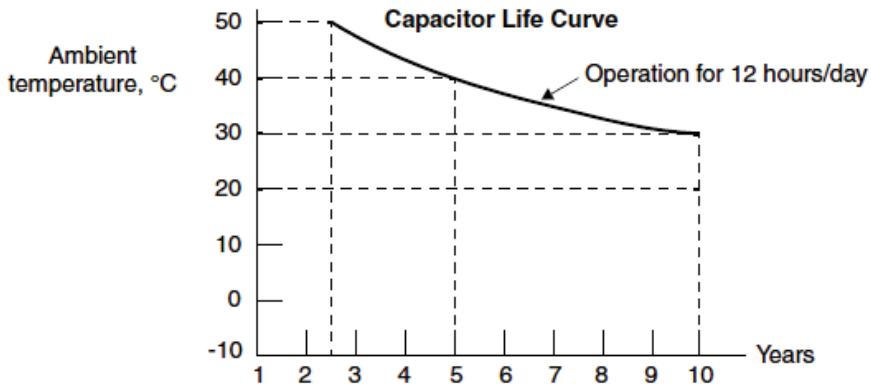

General Inverter Electrical Measurements

The following table specifies how to measure key system electrical parameters. The diagrams on the next page show inverter-motor systems and the location of measurement points for these parameters.

Parameter	Circuit location of measurement	Measuring instrument	Notes	Reference Value
Supply voltage E_1	E_R – across L1 and L2 E_S – across L2 and L3 E_T – across L3 and L1	Moving-coil type voltmeter or rectifier type voltmeter	Fundamental wave effective value	Commercial supply voltage 200V class: 200–240V, 50/60 Hz 400V class: 380–460V, 50/60 Hz
	Single phase E1—across L1 and N			
Supply current I_1	I_r – L1 I_s – L2 I_t – L3		Total effective value	—
	Single phase I_1 – L1			
Supply power W_1	W_{11} – across L1 and L2 W_{12} – across L2 and L3		Total effective value	—
	Single phase W_1 – across L1 and N)			
Supply power factor Pf_1	$$Pf_1 = \frac{W_1}{\sqrt{3} \times E_1 \times I_1} \times 100\%$$			—
	Single phase $$Pf_1 = \frac{W_1}{E_1 \times I_1} \times 100\%$$			
Output voltage E_O	E_U – across U and V E_V – across V and W E_W – across W and U	Rectifier type voltmeter	Total effective value	—
Output current I_O	I_U – U I_V – V I_W – W	Moving-coil type ammeter	Total effective value	—
Output power W_O	W_{O1} – across U and V W_{O2} – across V and W	Electronic type wattmeter	Total effective value	—
Output power factor Pf_O	Calculate the output power factor from the output voltage E, output current I, and output power W. $$Pf_O = \frac{W_1}{\sqrt{3} \times E_O \times I_O} \times 100\%$$			—

Note 1: Use a meter indicating a fundamental wave effective value for voltage, and meters indicating total effective values for current and power.

Note 2: The inverter output has a distorted waveform, and low frequencies may cause erroneous readings. However, the measuring instruments and methods listed above provide comparably accurate results.

Note 3: A general-purpose digital volt meter (DVM) is not usually suitable to measure a distorted waveform (not pure sinusoid).

The figures below show measurement locations for voltage, current, and power measurements listed in the table on the previous page. The voltage to be measured is the fundamental wave effective voltage. The power to be measured is the total effective power.

Single-phase Measurement Diagram

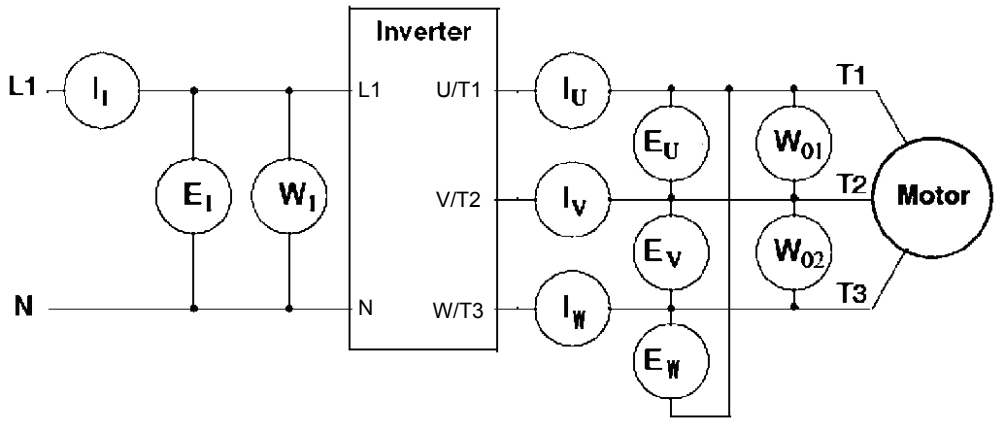

Three-phase Measurement Diagram

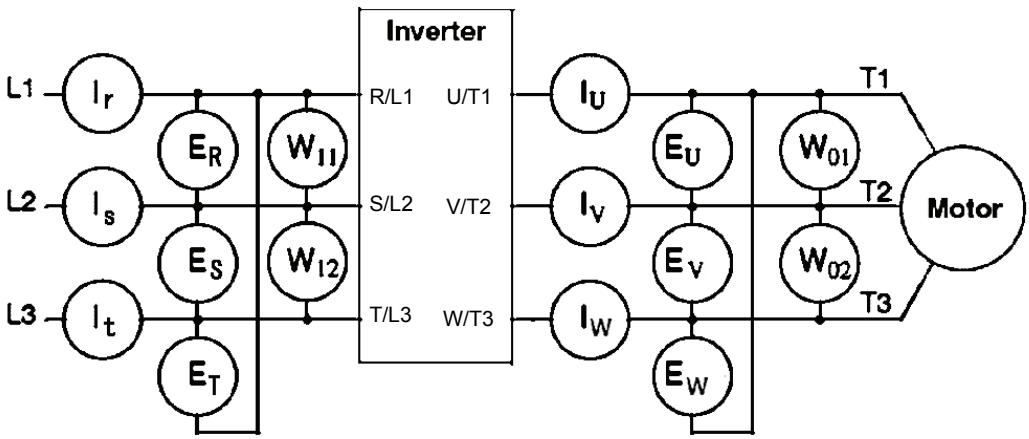

Inverter Output Voltage Measurement Techniques

Taking voltage measurements around drives equipment requires the right equipment and a safe approach. You are working with high voltages and high-frequency switching waveforms that are not pure sinusoids. Digital voltmeters will not usually produce reliable readings for these waveforms. And, it is usually risky to connect high voltage signals to oscilloscopes. The inverter output semiconductors have some leakage, and no-load measurements produce misleading results. So, we highly recommend using the following circuits to measure voltage for performing the equipment inspections.

Voltage measurement *with* load

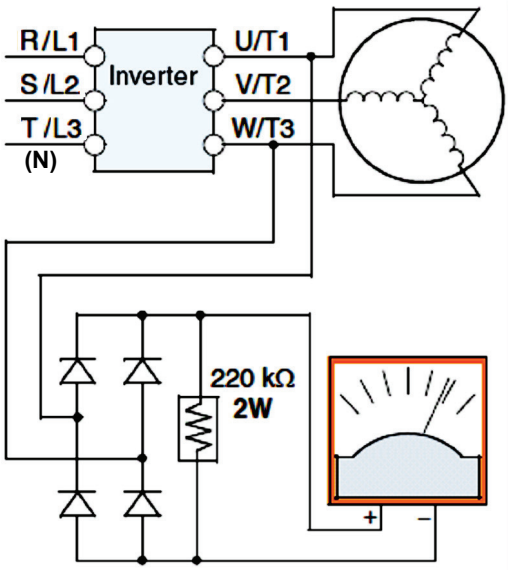

V Class	Diode Bridge	Voltmeter
200V Class	600V 0.01A min.	300V range
400V Class	100V 0.1A min.	600V range

Voltage measurement *without* load

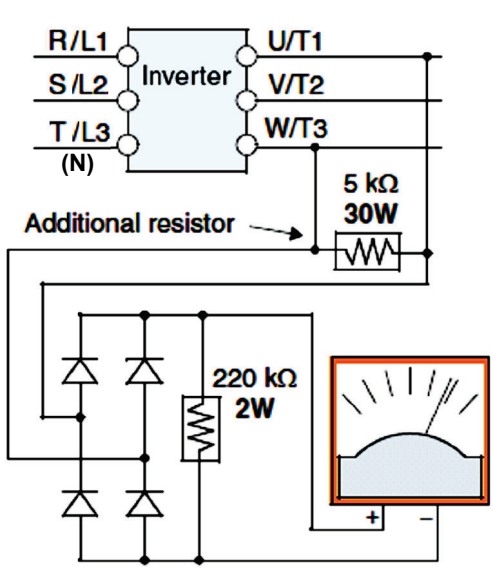

V Class	Diode Bridge	Voltmeter
200V Class	600V 0.01A min.	300V range
400V Class	100V 0.1A min.	600V range

HIGH VOLTAGE: Be careful not to touch wiring or connector terminals when working with the inverters and taking measurements. Be sure to place the measurement circuitry components above in an insulated housing before using them.

IGBT Test Method

The following procedure will check the inverter transistors (IGBTs) and diodes:

1. Disconnect input power to terminals [R, S, and T] and motor terminals [U, V, and W].
2. Disconnect any wires from terminals [+] and [–] for regenerative braking.
3. Use a Digital Volt Meter (DVM) and set it for 1Ω resistance range. You can check the status of the charging state of terminals [R, S, T, U, V, W, +, and –] of the inverter and the probe of the DVM by measuring the charging state.

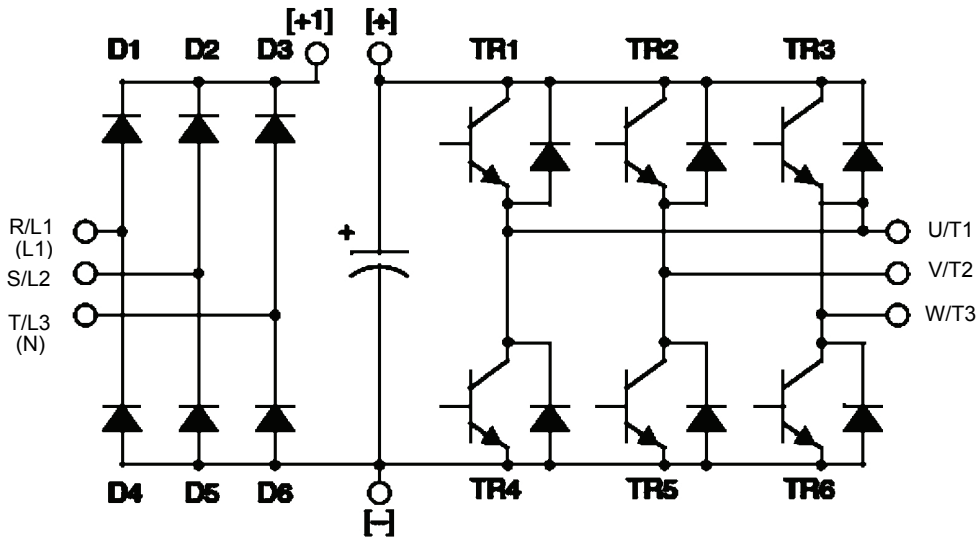

Table Legend Almost infinite resistance: ≅ ∞ Ω Almost zero resistance: ≅ 0 Ω

Part	DVM +	DVM –	Measured Value	Part	DVM +	DVM –	Measured Value	Part	DVM +	DVM –	Measured Value
D1	[R]	[+1]	≅ ∞ Ω	D5	[S]	[–]	≅ 0 Ω	TR3	[W]	[+]	≅ ∞ Ω
	[+1]	[R]	≅ 0 Ω		[–]	[S]	≅ ∞ Ω		[+]	[W]	≅ 0 Ω
D2	[S]	[+1]	≅ ∞ Ω	D6	[T]	[–]	≅ 0 Ω	TR4	[U]	[–]	≅ 0 Ω
	[+1]	[S]	≅ 0 Ω		[–]	[T]	≅ ∞ Ω		[–]	[U]	≅ ∞ Ω
D3	[T]	[+1]	≅ ∞ Ω	TR1	[U]	[+]	≅ ∞ Ω	TR5	[V]	[–]	≅ 0 Ω
	[+1]	[T]	≅ 0 Ω		[+]	[U]	≅ 0 Ω		[–]	[V]	≅ ∞ Ω
D4	[R]	[–]	≅ 0 Ω	TR2	[V]	[+]	≅ ∞ Ω	TR6	[W]	[–]	≅ 0 Ω
	[–]	[R]	≅ ∞ Ω		[+]	[V]	≅ 0 Ω		[–]	[W]	≅ ∞ Ω

NOTE: The resistance values for the diodes or the transistors will not be exactly the same, but they will be close. If you find a significance difference, a problem may exist.

NOTE: Before measuring the voltage between [+] and [–] with the DC current range, confirm that the smoothing capacitor is discharged fully, then execute the tests.

Warranty

Warranty Terms

The warranty period under normal installation and handling conditions shall be two (2) years from the date of manufacture, or one (1) year from the date of installation, whichever occurs first. The warranty shall cover the repair or replacement, at Hitachi's sole discretion, of ONLY the inverter that was installed.

1. Service in the following cases, even within the warranty period, shall be charged to the purchaser:
   a. Malfunction or damage caused by mis-operation or modification or improper repair
   b. Malfunction or damage caused by a drop after purchase and transportation
   c. Malfunction or damage caused by fire, earthquake, flood, lightening, abnormal input voltage, contamination, or other natural disasters
2. When service is required for the product at your work site, all expenses associated with field repair shall be charged to the purchaser.
3. Always keep this manual handy; please do not lose it. Please contact your Hitachi distributor to purchase replacement or additional manuals.

Glossary and Bibliography

In This Appendix… **page**

- **Glossary** **2**
- **Bibliography** **8**

CALL NOW 800-985-6929 http://www.automatedpt.com Email: charles@automatedpt.com

Glossary

Ambient Temperature The air temperature in the chamber containing a powered electronic unit. A unit's heat sinks rely on a lower ambient temperature in order to dissipate heat away from sensitive electronics.

Arrival Frequency The arrival frequency refers to the set output frequency of the inverter for the constant speed setting. The arrival frequency feature turns on an output when the inverter reaches the set constant speed. The inverter has various arrival frequencies and pulsed or latched logic options.

Auto-tuning The ability of a controller to execute a procedure that interacts with a load to determine the proper coefficients to use in the control algorithm. Auto-tuning is a common feature of process controllers with PID loops. Hitachi inverters feature auto tuning to determine motor parameters for optimal commutation. Auto-tuning is available as a special command from a digital operator panel. See also *Digital Operator Panel*.

Base Frequency The power input frequency for which an AC induction motor is designed to operate. Most motors will specify a 50 to 60 Hz value. The Hitachi inverters have a programmable base frequency, so you must ensure that parameter matches the attached motor. The term *base frequency* helps differentiate it from the carrier frequency. See also *Carrier Frequency* and *Frequency Setting*.

Braking Resistor An energy-absorbing resistor that dissipates energy from a decelerating load. Load inertia causes the motor to act as a generator during deceleration. For the X200 inverter models, the braking unit and braking resistor are optional (external) components. See also *Four-quadrant Operation* and *Dynamic Braking.*

Break-away Torque The torque a motor must produce to overcome the static friction of a load, in order to start the load moving.

Carrier Frequency The frequency of the constant, periodic, switching waveform that the inverter modulates to generate the AC output to the motor. See also *PWM*.

CE A regulatory agency for governing the performance of electronic products in Europe. Drive installations designed to have CE approval must have particular filter(s) installed in the application.

Choke An inductor that is tuned to react at radio frequencies is called a "choke," since it attenuates (chokes) frequencies above a particular threshold. Tuning is often accomplished by using a movable magnetic core. In variable-frequency drive systems, a choke positioned around high-current wiring can help attenuate harmful harmonics and protect equipment. See also *Harmonics*.

CALL NOW 800-985-6929 http://www.automatedpt.com Email: charles@automatedpt.com

DC Braking

The inverter DC braking feature stops the AC commutation to the motor, and sends a DC current through the motor windings in order to stop the motor. Also called "DC injection braking," it has little effect at high speed, and is used as the motor is nearing a stop.

Deadband

In a control system, the range of input change for which there is no perceptible change in the output. In PID loops, the error term may have a dead band associated with it. Deadband may or may not be desirable; it depends on the needs of the application.

Digital Operator Panel

For Hitachi inverters, "digital operator panel" (DOP) refers first to the operator keypad on the front panel of the inverter. It also includes hand-held remote keypads, which connect to the inverter via a cable. Finally, the DOP Professional is a PC-based software simulation of the keypad devices.

Diode

A semiconductor device that has a voltage-current characteristic that allows current to flow only in one direction, with negligible leakage current in the reverse direction. See also *Rectifier*.

Duty Cycle

1. The percent of time a square wave of fixed frequency is ON (high) versus OFF (low).
2. The ratio of operating time of a device such as a motor to its resting time. This parameter usually is specified in association with the allowable thermal rise for the device.

Dynamic Braking

For the X2002 inverter models, the braking unit and braking resistor are optional (external) components. The dynamic braking feature shunts the motor-generated EMF energy into a special braking resistor. The added dissipation (braking torque) is effective at higher speeds, having a reduced effect as the motor nears a stop.

Error

In process control, the error is the difference between the desired value or setpoint (SP) and the actual value of a the process variable (PV). See also *Process Variable* and *PID Loop*.

EMI

Electromagnetic Interference - In motor/drive systems, the switching of high currents and voltages creates the possibility of generating radiated electrical noise that may interfere with the operation of nearby sensitive electrical instruments or devices. Certain aspects of an installation, such as long motor lead wire lengths, tend to increase the chance of EMI. Hitachi provides accessory filter components you can install to decrease the level of EMI.

Four-quadrant operation

Referring to a graph of torque versus direction, a four-quadrant drive can turn the motor either forward or reverse, as well as decelerate in either direction (see also *reverse torque*). A load that has a relatively high inertia and must move in both directions and change directions rapidly requires four-quadrant capability from its drive.

CALL NOW 800-985-6929 http://www.automatedpt.com Email: charles@automatedpt.com

Free-run Stop A method of stopping a motor, caused when the inverter simply turns OFF its motor output connections. This may allow the motor and load to coast to a stop, or a mechanical brake may intervene and shorten the deceleration time.

Frequency Setting While frequency has a broad meaning in electronics, it typically refers to motor speed for variable-frequency drives (inverters). This is because the output frequency of the inverter is variable, and is proportional to the attained motor speed. For example, a motor with a base frequency of 60 Hz can be speed controlled with an inverter output varying form 0 to 60 Hz. See also *Base Frequency*, *Carrier Frequency*, and *Slip*.

Harmonics A *harmonic* is a whole number multiple of a base of fundamental frequency. The square waves used in inverters produce high frequency harmonics, even though the main goal is to produce lower-frequency sine waves. These harmonics can be harmful to electronics (including motor windings) and cause radiated energy that interferes with nearby electronic devices. Chokes, line reactors, and filters are sometimes used to suppress the transmission of harmonics in an electrical system. See also *Choke*.

Horsepower A unit of physical measure to quantify the amount of work done per unit of time. You can directly convert between horsepower and Watts as measurements of power.

IGBT **Insulated Gate Bipolar Transistor**(IGBT) – A semiconductor transistor capable of conducting very large currents when in saturation and capable of withstanding very high voltages when it is OFF. This high-power bipolar transistor is the type used in Hitachi inverters.

Inertia The natural resistance a stationary object to being moved by an external force. See also *Momentum*.

Intelligent Terminal A configurable input or output logic function on the Hitachi inverters. Each terminal may be assigned one of several functions.

Inverter A device that electronically changes DC to AC current through an alternating process of switching the input to the output, inverted and non-inverted. A variable speed drive such as the Hitachi X2002 is also called an inverter, since it contains three inverter circuits to generate 3-phase output to the motor.

Isolation Transformer A transformer with 1:1 voltage ratio that provides electrical isolation between its primary and secondary windings. These are typically used on the power input side of the device to be protected. An isolation transformer can protect equipment from a ground fault or other malfunction of nearby equipment, as well as attenuate harmful harmonics and transients on the input power.

CALL NOW 800-985-6929 http://www.automatedpt.com Email: charles@automatedpt.com

Jogging Operation Usually done manually, a jog command from an operator's panel requests the motor/drive system to run indefinitely in a particular direction, until the machine operator ends the jog operation.

Jump Frequency A *jump frequency* is a point on the inverter output frequency range that you want the inverter to skip around. This feature may be used to avoid a resonant frequency, and you can program up to three jump frequencies in the inverter.

Line Reactor A three-phase inductor generally installed in the AC input circuit of an inverter to minimize harmonics and to limit short-circuit current.

Momentum The physical property of a body in motion that causes it to remain in motion. In the case of motors, the rotor and attached load are rotating and possesses angular momentum.

Multi-speed Operation The ability of a motor drive to store preset discrete speed levels for the motor, and control motor speed according to the currently selected speed preset. The Hitachi inverters have 16 preset speeds.

Motor Load In motor terminology, motor load consists of the inertia of the physical mass that is moved by the motor and the related friction from guiding mechanisms. See also *Inertia*.

NEC The National Electric Code is a regulatory document that governs electrical power and device wiring and installation in the United States.

NEMA The National Electric Manufacturer's Association. NEMA Codes are a published series of device ratings standards. Industry uses these to evaluate or compare the performance of devices made by various manufacturers to a known standard.

Open-collector Outputs A common logic-type discrete output that uses an NPN transistor that acts as a switch to a power supply common, usually ground. The transistor's *collector* is *open* for external connection (not connected internally). Thus, the output *sinks* external load current to ground.

Power Factor A ratio that expresses a phase difference (timing offset) between current and voltage supplied by a power source to a load. A perfect power factor = 1.0 (no phase offset). Power factors less than one cause some energy loss in power transmission wiring (source to load).

PID Loop Proportional - Integral-Derivative - A mathematical model used for process control. A process controller maintains a process variable (PV) at a setpoint (SP) by using its PID algorithm to compensate for dynamic conditions and vary its output to drive the PV toward the desired value. For variable-frequency drives, the process variable is the motor speed. See also *Error*.

CALL NOW 800-985-6929 http://www.automatedpt.com Email: charles@automatedpt.com

Process Variable A physical property of a process that is of interest because it affects the quality of the primary task accomplished by the process. For an industrial oven, temperature is the process variable. See also *PID Loop* and *Error*.

PWM Pulse-width modulation: A type of AC adjustable frequency drive that accomplishes frequency and voltage control at the output section (inverter) of the drive. The drive output voltage waveform is at a constant amplitude, and by "chopping" the waveform (pulsewidth-modulating), the average voltage is controlled. The chopping frequency is sometimes called the *Carrier Frequency*.

Reactance The impedance of inductors and capacitors has two components. The resistive part is constant, while the reactive part changes with applied frequency. These devices have a complex impedance (complex number), where the resistance is the real part and the reactance is the imaginary part.

Rectifier An electronic device made of one or more diodes that converts AC power into DC power. Rectifiers are usually used in combination with capacitors to filter (smooth) the rectified waveform to closely approximate a pure DC voltage source.

Regenerative Braking A particular method of generating reverse torque to a motor, an inverter will switch internally to allow the motor to become a generator and will either store the energy internally, deliver the braking energy back to the main power input, or dissipate it with a resistor.

Regulation The quality of control applied to maintain a parameter of interest at a desired value. Usually expressed as a percent (±) from the nominal, motor regulation usually refers to its shaft speed.

Reverse Torque The torque applied in the direction opposite to motor shaft rotation. As such, reverse torque is a decelerating force on the motor and its external load.

Rotor The windings of a motor that rotate, being physically coupled to the motor shaft. See also *Stator.*

Saturation Voltage For a transistor semiconductor device, it is in saturation when an increase in input current no longer results in an increase in the output current. The saturation voltage is the voltage drop across the device. The ideal saturation voltage is zero.

Sensorless Vector Control A technique used in some variable-frequency drives (featured in some other Hitachi inverter model families) to rotate the force vector in the motor without the use of a shaft position sensor (angular). Benefits include an increase in torque at the lowest speed and the cost savings from the lack of a shaft position sensor.

CALL NOW 800-985-6929 http://www.automatedpt.com Email: charles@automatedpt.com

Setpoint (SP) The *setpoint* is the desired value of a process variable of interest. See also *Process Variable (PV)* and *PID Loop*.

Single-phase power An AC power source consisting of Hot and Neutral wires. An Earth Ground connection usually accompanies them. In theory, the voltage potential on Neutral stays at or near Earth Ground, while Hot varies sinusoidally above and below Neutral. This power source is named Single Phase to differentiate it from three-phase power sources. Some Hitachi inverters can accept single phase input power, but they all output three-phase power to the motor. See also T*hree-phase*.

Slip The difference between the theoretical speed of a motor at no load (determined by its inverter output waveforms) and the actual speed. Some slip is essential in order to develop torque to the load, but too much will cause excessive heat in the motor windings and/or cause the motor to stall.

Squirrel Cage A "nick-name" for the appearance of the rotor frame assembly for an AC induction motor.

Stator The windings in a motor that are stationary and coupled to the power input of the motor. See also *Rotor*.

Tachometer

1. A signal generator usually attached to the motor shaft for the purpose of providing feedback to the speed controlling device of the motor.
2. A speed-monitoring test meter that may optically sense shaft rotation speed and display it on a readout.

Thermal Switch An electromechanical safety device that opens to stop current flow when the temperature at the device reaches a specific temperature threshold. Thermal switches are sometimes installed in the motor in order to protect the windings from heat damage. The inverter can use thermal switch signals to trip (shut down) if the motor overheats. See also *Trip*.

Thermistor A type of temperature sensor that changes its resistance according to its temperature. The sensing range of thermistors and their ruggedness make them ideal for motor overheating detection. Hitachi inverters have built-in thermistor input circuits, which can detect an overheated motor and shut off (trip) the inverter output.

Three-phase power An AC power source with three Hot connections that have phase offsets of 120 degrees is a 3-phase power source. Usually, Neutral and Earth Ground wires accompany the three Hot connections. Loads may be configured in a delta or Y configuration. A Y-connected load such as an AC induction motor will be a balanced load; the currents in all the Hot connections are the same. Therefore, the Neutral connection is theoretically zero. This is why inverters that generate 3-phase power for motors do not generally have a Neutral connection to the motor. However, the Earth Ground connection is important for safety reasons, and is provided.

CALL NOW 800-985-6929 http://www.automatedpt.com Email: charles@automatedpt.com

Torque The rotational force exerted by a motor shaft. The units of measurement consist of the distance (radius from shaft center axis) and force (weight) applied at that distance. Units are usually given as pound-feet, ounce-inches, or Newton-meters.

Transistor A solid state, three-terminal device that provides amplification of signals and can be used for switching and control. While transistors have a linear operating range, inverters use them as high-powered switches. Recent developments in power semiconductors have produced transistors capable of handling high voltages and currents, all with high reliability. The saturation voltage has been decreasing, resulting in less heat dissipation. Hitachi inverters use state-of-the-art semiconductors to provide high performance and reliability in a compact package. See also *IGBT* and *Saturation Voltage*.

Trip Event An event that causes the inverter to stop operation is called a "trip" event (as in *tripping* a circuit breaker). The inverter keeps a history log of trip events. They also require an action to clear.

Watt Loss A measure of the internal power loss of a component, the difference between the power it consumes and what its output delivers. An inverter's watt loss is the input power minus the power delivered to the motor. The watt loss is typically highest when an inverter is delivering its maximum output. Therefore, watt loss is usually specified for a particular output level. Inverter watt loss specifications are important when designing enclosures.

Bibliography

Title	Author and Publisher
Variable Speed Drive Fundamentals, 2nd Ed.	Phipps, Clarence A. The Fairmont Press, Inc. / Prentice-Hall, Inc. 1997
Electronic Variable Speed Drives	Brumbach, Michael E. Delmar Publishers 1997 ISBN 0-8273-6937-9
Hitachi Inverter Technical Guide Book	Published by Hitachi, Ltd. Japan 1995 Publication SIG-E002

CALL NOW 800-985-6929 http://www.automatedpt.com Email: charles@automatedpt.com

ModBus Network Communications

B

In This Appendix… **page**

- **Introduction** **2**
- **Connecting the Inverter to ModBus** **3**
- **Network Protocol Reference** **6**
- **ModBus Data Listing** **19**

Introduction

X2002 Series inverters have built-in RS-485 serial communications, featuring the ModBus RTU protocol. The inverters can connect directly to existing factory networks or work with new networked applications, without any extra interface equipment. The specifications for X2002 serial communications are in the following table.

Item	Specifications	User-selectable
Transmission speed	4800 / 9600 / 19200 bps	✓
Communication mode	Asynchronous	✕
Character code	Binary	✕
LSB placement	Transmits LSB first	✕
Electrical interface	RS-485 differential transceiver	✕
Data bits	8-bit (ModBus RTU mode)	(ASCII mode not available)
Parity	None / even / odd	✓
Stop bits	1 or 2 bits	✓
Startup convention	One-way start from host device	✕
Wait time for response	0 to 1000 msec.	✓
Connections	Station address numbers from 1 to 32	✓
Connector	RS45 modular jack	–
Error check	Overrun, Fleming block check code, CRC-16, or horizontal parity	–

The network diagram below shows a series of inverters communicating with a host computer. each inverter must have a unique address, from 1 to 32, on the network. In a typical application, a host computer or controller is the master and each of the inverter(s) or other devices is a slave.

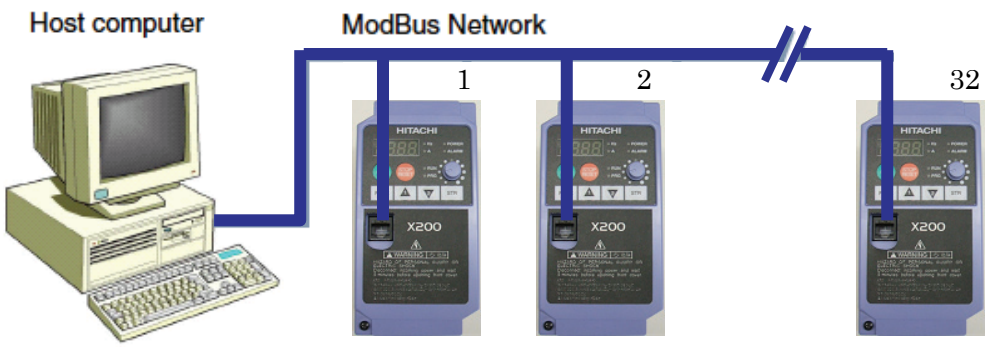

Connecting the Inverter to ModBus

Follow these steps in this section to connect the inverter to the ModBus network.

1. **Open Serial Port Cover** - The inverter keypad has a hinged dust cover protecting the serial port connector. Lift the cover from the bottom edge, and tilt upward as shown below.

2. **Modular Interconnect Removal** - With the serial port cover opened, notice the RJ45 modular connector behind it. Connect the serial cable and engage the locking tab in the connector.

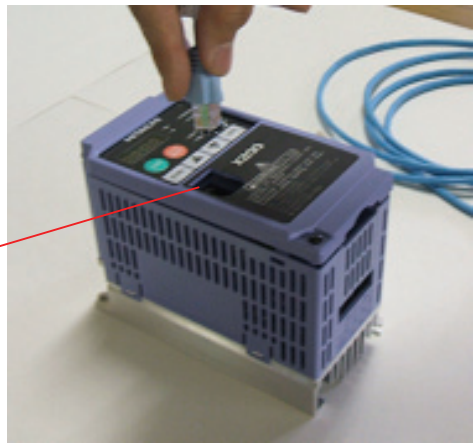

3. **Cable Wiring** - The inverter communications port uses RS485 differential transceiver. The pinout is shown to the right and listed below. Be sure the cable connection you make matches the diagram.

Pin	Symbol	Description
1	5V	Not used. Do not connect
2	(SP)	Not used. Do not connect
3	(SN)	Not used. Do not connect
4	L(GND to 5V)	Not used. Do not connect
5	SP	Send data positive
6	SN	Send data negative
7	L(GND to 5V)	Not used. Do not connect
8	–(N.C.)	Not used. Do not connect

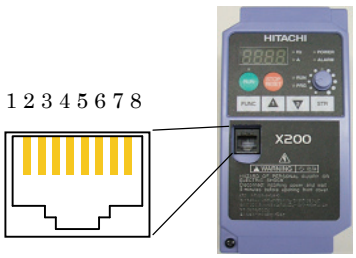

4. **Terminate Network Wiring** - The RS-485 wiring must be terminated at each physical end to suppress electrical reflections and help decrease transmission errors. The X200₂ communications port does not include a termination resistor. Therefore, you will need to add termination to the inverter if it is at the end of the network wiring. Select termination resistors that match the characteristic impedance of the network cable. The diagram below shows a network with the needed termination resistor at each end.

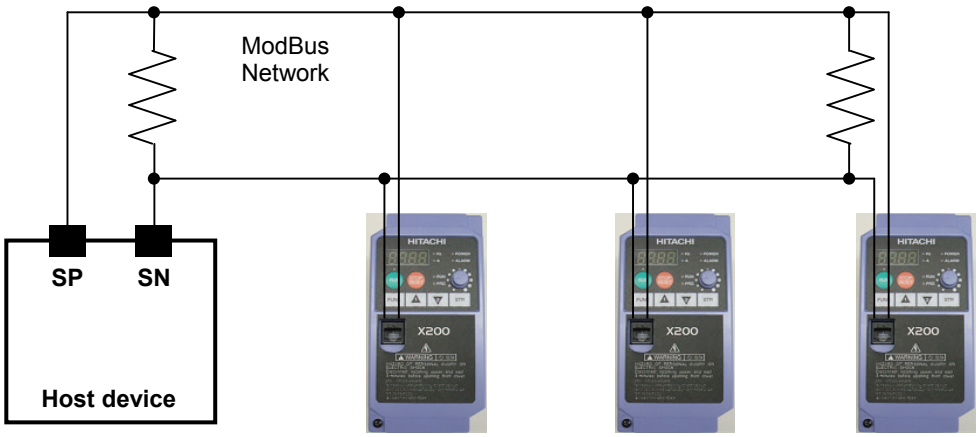

5. **Set Inverter OPE/485 Switch** - The inverter serial port accepts a connection to either the inverter keypad or the network. After removing the keypad, you will need to set a DIP switch **S7** on the inverter to configure the port for ModBus communications. Setting the switch will require removing the front housing cover. Remember to power OFF the inverter before removing the cover or changing the DIP switch **S7** setting. Refer to "Front Housing Cover" on page 2–3 for detailed instructions. Locate the OPE/485 DIP switch as shown in the figure below. Carefully move the switch to the upper position labeled "485" (slide in direction of arrow). Then replace the front housing cover.

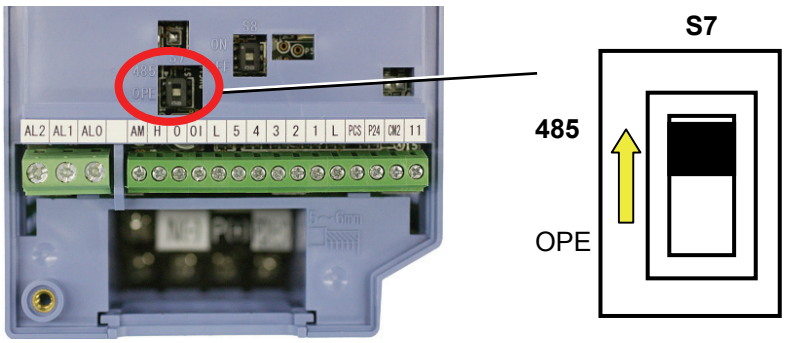

At this point the electrical network connection is complete. The next step will show how to configure parameters and settings related to ModBus communications.

6. **Inverter Parameter Setup** - The inverter has several settings related to ModBus communications. The table below lists them together. The *Required* column indicates which parameters *must* be set properly to allow communications. You may need to refer to the host computer documentation in order to match some of its settings.

Func. Code	Name	Required	Settings
A001	Frequency source setting	✓	00…Keypad potentiometer 01…Control terminal 02…Function F001 setting **03…ModBus network input** 10…Calculate function output
A002	Run command source setting	✓	01…Control terminal 02…Run key on keypad, or digital operator **03… ModBus network input**
B089	Monitor display select for networked inverter	–	01…Output frequency monitor 02…Output current monitor 03…Rotation direction monitor 04…Process variable (PV), PID feedback monitor 05…Intelligent input terminal status 06…Intelligent output terminal status 07…Scaled output frequency monitor
C070	Selection of OPE/ModBus	✓	02...OPE or option **03...ModBus (485)**
C071	Communication speed selection	✓	04…4800 bps 05…9600 bps 06…19200 bps
C072	Node allocation	✓	Network address, range is 1 to 32
C074	Communication parity selection	✓	00…No parity 01…Even parity 02…Odd parity
C075	Communication stop bit selection	✓	Range is 1 to 2
C076	Communication error select	–	00…Trip (Error code E60) 01…Decelerate to a stop and trip (Error code E60) 02…Disable 03…Free run stop (coasting) 04…Decelerate to a stop
C077	Communication error time-out	–	Comm. Watchdog timer period, range is 0.00 to 99.99 sec.
C078	Communication wait time	✓	Time the inverter waits after receiving a message before it transmits. Range is 0. to 1000. ms

NOTE: When you edit and store any of the parameters above, the inverter causes it to take effect immediately. ModBus transmission occurs only after you set the OPE/485 DIP switch to the "485" position and turn on the inverter again. Note that parameters C070 to C078 cannot be changed via the network. To edit them, you must disconnect the inverter from the ModBus and wait for about 30sec until the inverter's internal keypad begin functioning. Then use this keypad to edit the parameters. Please don't connect other external programming devices to RJ45 connector, because the bus mode is in RS485 mode. It may cause the inverter or external programming devices to be damaged when DIP switch is in "485" position.

Network Protocol Reference

Transmission procedure

The transmission between the external control equipment and the inverter takes the procedure below.

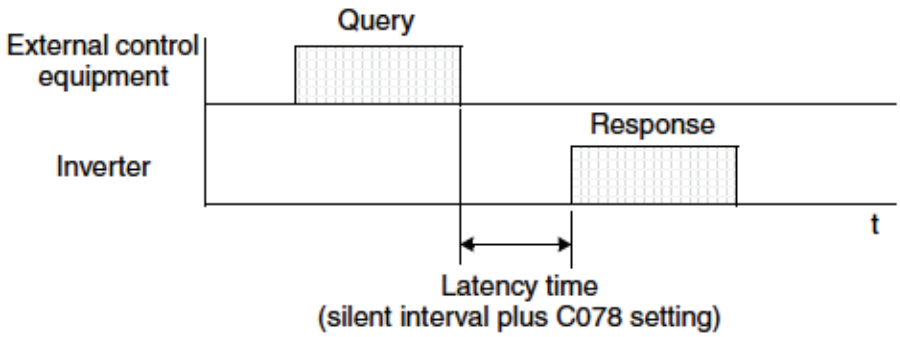

- Query - A frame sent from the external control equipment to the inverter
- Response - A frame returned from inverter to the external control equipment

The inverter returns the response only after the inverter receives a query from the external control equipment and does not output the response positively. Each frame is formatted (with commands) as follows:

Frame Format
Header (silent interval)
Slave address
Function code
Data
Error check
Trailer (silent interval)

Message Configuration: Query

Slave address:

- This is a number of 1 to 32 assigned to each inverter (slave). (Only the inverter having the address given as a slave address in the query can receive the query.)
- When slave address “0” is specified, the query can be addressed to all inverters simultaneously. (Broadcasting)
- In broadcasting, you cannot call and loop back data.

Data:

- A function command is set here.
- The data format used in the X2002 series is corresponding to the Modbus data format below.

Name of Data	Description
Coil	Binary data that can be referenced and changed (1 bit long)
Holding Register	16-bit data that can be referenced and changed

Function code:

Specify a function you want to make the inverter execute. Function codes available to the X2002 series are listed below.

Function Code	Function	Maximum data size (bytes available per message)	Maximum number of data elements available per message
0 1 h	Read Coil Status	4	32 coils (in bits)
0 3 h	Read Holding Resistor	4	4 registers (in bytes)
0 5 h	Write in Coil	1	1 coil (in bits)
0 6 h	Write in Holding Register	1	1 register (in bytes)
0 8 h	Loopback Test	–	–
0 F h	Write in Coils	4	32 coils (in bits)
1 0 h	Write in Registers	4	4 registers (in bytes)

Error check:

Modbus-RTU uses CRC (Cyclic Redundancy Check) for error checking.

- The CRC code is 16-bit data that is generated for 8-bit blocks of arbitrary length.
- The CRC code is generated by a generator polynomial CRC-16 (X16+ X15+ X2+ 1).

Header and trailer (silent interval):

Latency is the time between the reception of a query from the master and transmission of a response from the inverter.

- 3.5 characters (24 bits) are always required for latency time. If the latency time shorter than 3.5 characters, the inverter returns no response.
- The actual transmission latency time is the sum of silent interval (3.5 characters long) + C078 (transmission latency time).

Message Configuration: Response

Transmission time required:

- A time period between reception of a query from the master and transmission of a response from the inverter is the sum of the silent interval (3.5 characters long) + C078 (transmission latency time).
- The master must provide a time period of the silent interval (3.5 characters long or longer) before sending another query to an inverter after receiving a response from the inverter.

Normal response:

- When receiving a query that contains a function code of Loopback (08h), the inverter returns a response of the same content of the query.
- When receiving a query that contains a function code of Write in Register or Coil (05h, 06h, 0Fh, or 10h), the inverter directly returns the query as a response.
- When receiving a query that contains a function code of Read Register or Coil (01h or 03h), the inverter returns, as a response, the read data together with the same slave address and function code as those of the query.

Response when an error occurs:

- When finding any error in a query (except for a transmission error), the inverter returns an exception response without executing anything.
- You can check the error by the function code in the response. The function code of the exception response is the sum of the function code of the query and 80h.
- The content of the error is known from the exception code.

Field Configuration
Slave address
Function code
Exception code
CRC-16

Exception Code	Description
0 1 h	The specified function is not supported.
0 2 h	The specified function is not found.
0 3 h	The format of the specified data is not acceptable.
2 1 h	The data to be written in a holding register is outside the inverter.
2 2 h	The specified functions are not available to the inverter. • Function to change the content of a register that cannot be changed while the inverter is in service • Function to submit an ENTER command during running (UV) • Function to write in a register during tripping (UV) • Function to write in a read-only register (or coil)

No response occurs:

In the cases below, the inverter ignores a query and returns no response.

- When receiving a broadcasting query
- When detecting a transmission error in reception of a query
- When the slave address set in the query is not equal to the slave address of the inverter
- When a time interval between data elements constituting a message is shorter than 3.5 characters
- When the data length of the query is invalid

NOTE: Provide a timer in the master and make the master retransmit the same query when no response is made within a preset time period after the preceding query was sent.

Explanation of function codes

Read Coil Status [01h]:

This function reads the status (ON/OFF) of selected coils. An example follows below.

- Read intelligent input terminals [1] to [5] of an inverter having a slave address "8."
- This example assumes the intelligent input terminals have terminal states listed below.

Item	Data				
Intelligent input terminal	[1]	[2]	[3]	[4]	[5]
Coil number	7	8	9	10	11
Coil Status	ON	OFF	ON	OFF	OFF

Query:

No.	Field Name	Example (Hex)
1	Slave address *1	08
2	Function code	01
3	Coil start address *4 (high order)	00
4	Coil start address *4 (low order)	06
5	Number of coils (high order *2)	00
6	Number of coils (low order *2)	05
7	CRC-16 (high order)	1C
8	CRC-16 (low order)	91

Response:

No.	Field Name	Example (Hex)
1	Slave address	08
2	Function code	01
3	Data size (in bytes)	01
4	Coil data *3	05
5	CRC-16 (high order)	92
6	CRC-16 (low order)	17

Note 1: Broadcasting is disabled.

Note 2: When 0 or more than 31 is specified as a number of coils, error code "03h" is returned.

Note 3: Data is transferred by the specified number of data bytes (data size).

Note 4: The PDU Coils are addressed starting at zero. Therefore coils numbered 1-31 are addressed as 0-30. Coil address value (transmitted on Modbus line) is 1 less than the Coil Number.

- The data set in the response shows terminal state of coils 7 to 14.
- Data "05h = 00000101b" indicates the following assuming coil 7 is the LSB.

Item	Data							
Coil Number	14	13	12	11	10	9	8	7
Coil Status	OFF	OFF	OFF	OFF	OFF	ON	OFF	ON

- When a read coil is outside the defined coils, the final coil data to be transmitted contains "0"as the status of the coil outside the range.
- When the Read Coil Status command cannot be executed normally, see the exception response.

Read Holding Register [03h]:

This function reads the contents of the specified number of consecutive holding registers (of specified register addresses). An example follows below.

- Reading Trip monitor 1 factor and trip frequency, current, and voltage from an inverter having a slave address "1"
- This example assumes the previous three trip factors are as follows:

X2002 Command	D081 (factor)	D081 (frequency)	D081 (output current)	D081 (DC-bus Voltage)
Register Number	0012h	0014h	0016h	0017h
Trip factor	Over-Current (E03)	9.9Hz	3.0A	284V

Query:

No.	Field Name	Example (Hex)
1	Slave address *1	01
2	Function code	03
3	Register start address *3 (high order)	00
4	Register start address *3 (low order)	11
5	Number of holding registers (high order)	00
6	Number of holding registers(low order)	06
7	CRC-16 (high order)	95
8	CRC-16 (low order)	CD

Response:

No.	Field Name	Example (Hex)
1	Slave address	01
2	Function code	03
3	Data size (in bytes) *2	0C
4	Register data 1 (high order)	00
5	Register data 1 (high order)	03
6	Register data 2 (high order)	00
7	Register data 2 (low order)	00
8	Register data 3 (high order)	00
9	Register data 3 (low order)	63
10	Register data 4 (high order)	00
11	Register data 4 (low order)	00
12	Register data 5 (high order)	00
13	Register data 5 (low order)	1E
14	Register data 6 (high order)	01
15	Register data 6 (low order)	1C
16	CRC-16 (high order)	AF
17	CRC-16 (low order)	6D

Note 1: Broadcasting is disabled.

Note 2: Data is transferred by the specified number of data bytes (data size). In this case, 6 bytes are used to return the content of three holding registers.

Note 3: The PDU Register Number are addressed starting at zero. Therefore register numbered "0012h" are addressed as "0011h". Register address value (transmitted on Modbus line) is 1 less than the Register Number.

The data set in the response is as follows:

Response Buffer	4-5		6-7		8-9	
Register Number	12+0 (high order)	12+0 (low order)	12+1 (high order)	12+1 (low order)	12+2 (high order)	12+2 (low order)
Register Data	0003h		00h	00h	0063h	
Trip data	Trip factor (E03)		Not used		Frequency (9.9Hz)	
Response Buffer	**10-11**		**12-13**		**14-15**	
Register Number	12+3 (high order)	12+3 (low order)	12+4 (high order)	12+4 (low order)	12+5 (high order)	12+5 (low order)
Register Data	00h	00h	001Eh		011Ch	
Trip data	Not used		Output current (3.0A)		DC-bus voltage (284V)	

When the Read Holding Register command cannot be executed normally, refer to the exception response.

Write in Coil [05h]:

This function writes data in a single coil. Coil status changes are as follows:

Data	Coil Status	
	OFF to ON	ON to OFF
Change data (high order)	FFh	00h
Change data (low order)	00h	00h

An example follows (note that to command the inverter, set A002=03):

- Sending a RUN command to an inverter having slave address “8”
- This example writes in coil number “1.”

Query:

No.	Field Name	Example (Hex)
1	Slave address *1	08
2	Function code	05
3	Coil start address *2 (high order)	00
4	Coil start address *2 (low order)	00
5	Change data (high order)	FF
6	Change data (low order)	00
7	CRC-16 (high order)	8C
8	CRC-16 (low order)	A3

Response:

No.	Field Name	Example (Hex)
1	Slave address	08
2	Function code	05
3	Coil start address *2 (high order)	00
4	Coil start address *2 (low order)	00
5	Change data (high order)	FF
6	Change data (low order)	00
7	CRC-16 (high order)	8C
8	CRC-16 (low order)	A3

Note 1: No response is made for a broadcasting query.

Note 2: The PDU Coils are addressed starting at zero. Therefore coils numbered 1-31 are addressed as 0-30. Coil address value (transmitted on Modbus line) is 1 less than the Coil Number.

When writing in a selected coil fails, see the exception response.

Write in Holding Register [06h]:

This function writes data in a specified holding register. An example follows:

- Write "50Hz" as the first Multi-speed 0 (A020) in an inverter having slave address "5."
- This example uses change data "500(1F4h)" to set "50Hz" as the data resolution of the register "1029h" holding the first Multi-speed 0 (A020) is 0.1Hz

Query:

No.	Field Name	Example (Hex)
1	Slave address *1	08
2	Function code	06
3	Register start address *2 (high order)	10
4	Register start address *2 (low order)	28
5	Change data (high order)	01
6	Change data (low order)	F4
7	CRC-16 (high order)	0D
8	CRC-16 (low order)	8C

Response:

No.	Field Name	Example (Hex)
1	Slave address	08
2	Function code	06
3	Register start address *2 (high order)	10
4	Register start address *2 (low order)	28
5	Change data (high order)	01
6	Change data (low order)	F4
7	CRC-16 (high order)	0D
8	CRC-16 (low order)	8C

Note 1: No response is made for a broadcasting query.

Note 2: The PDU Register Number are addressed starting at zero. Therefore register numbered "1029h" are addressed as "1028h". Register address value (transmitted on Modbus line) is 1 less than the Register Number.

When writing in a selected holding register fails, see the exception response.

Loopback Test [08h]:

This function checks a master-slave transmission using any test data. An example follows:

- Send test data to an inverter having slave address "1" and receiving the test data from the inverter (as a loopback test).

Query:

No.	Field Name	Example (Hex)
1	Slave address *1	01
2	Function code	08
3	Test subcode (high order)	00
4	Test subcode (low order)	00
5	Data (high order)	Any
6	Data (low order)	Any
7	CRC-16 (high order)	CRC
8	CRC-16 (low order)	CRC

Response:

No.	Field Name	Example (Hex)
1	Slave address *1	01
2	Function code	08
3	Test subcode (high order)	00
4	Test subcode (low order)	00
5	Data (high order)	Any
6	Data (low order)	Any
7	CRC-16 (high order)	CRC
8	CRC-16 (low order)	CRC

Note 1: Broadcasting is disabled.

When test subcode is for echo (00h, 00h) only and not available to the other commands.

Write in Coils [0Fh]:

This function writes data in consecutive coils. An example follows:

- Change the state of intelligent input terminal [1] to [5] of an inverter having a slave address "8."
- This example assumes the intelligent input terminals have terminal states listed below.

Item	Data				
Intelligent input terminal	[1]	[2]	[3]	[4]	[5]
Coil Number	7	8	9	10	11
Terminal status	ON	ON	ON	OFF	ON

Query:

No.	Field Name	Example (Hex)
1	Slave address *1	08
2	Function code	0F
3	Coil start address *3 (high order)	00
4	Coil start address *3 (low order)	06
5	Number of coils (high order)	00
6	Number of coils (low order)	05
7	Byte number *2	02
8	Change data (high order)	17
9	Change data (low order)	00
10	CRC-16 (high order)	83
11	CRC-16 (low order)	EA

Response:

No.	Field Name	Example (Hex)
1	Slave address	08
2	Function code	0F
3	Coil start address *3 (high order)	00
4	Coil start address *3 (low order)	06
5	Number of coils (high order)	00
6	Number of coils (low order)	05
7	CRC-16 (high order)	75
8	CRC-16 (low order)	50

Note 1: Broadcasting is disabled.

Note 2: The change data is a set of high-order data and low-order data. So when the size (in bytes) of data to be changed is an odd start coil number ("7"), add "1" to the data size (in bytes) to make it an even number.

Note 3: The PDU Coils are addressed starting at zero. Therefore coils numbered 1-31 are addressed as 0-30. Coil address value (transmitted on Modbus line) is 1 less than the Coil Number.

Write in Holding Registers [10h]:

This function writes data in consecutive holding registers. An example follows:

- Write "3000 seconds" as the first acceleration time 1 (F002) in an inverter having a slave address "8."
- This example uses change data "300000(493E0h)" to set "3000 seconds" as the data resolution of the registers "1014h" and "1015h" holding the first acceleration time 1 (F002) is 0.01 second.

Query:

No.	Field Name	Example (Hex)
1	Slave address *1	08
2	Function code	10
3	Start address *3 (high order)	10
4	Start address *3 (low order)	13
5	Number of holding registers (high order)	00
6	Number of holding registers (low order)	02
7	Byte number *2	04
8	Change data 1 (high order)	00
9	Change data 1 (low order)	04
10	Change data 2 (high order)	93
11	Change data 2 (low order)	E0
12	CRC-16 (high order)	7D
13	CRC-16 (low order)	53

Response:

No.	Field Name	Example (Hex)
1	Slave address	08
2	Function code	10
3	Start address *3 (high order)	10
4	Start address *3 (low order)	13
5	Number of holding registers (high order)	00
6	Number of holding registers (low order)	02
7	CRC-16 (high order)	B4
8	CRC-16 (low order)	54

Note 1: Broadcasting is disabled.

Note 2: This is not the number of holding registers. Specify the number of bytes of data to be changed.

Note 3: The PDU Register Number are addressed starting at zero. Therefore register numbered "1014h" are addressed as "1013h". Register address value (transmitted on Modbus line) is 1 less than the Register Number.

When writing in selected holding registers fails, see the exception response.

Exception Response:

When sending a query (excluding a broadcasting query) to an inverter, the master always requests a response from the inverter. Usually, the inverter returns a response according to the query. However, when finding an error in the query, the inverter returns an exception response. The exception response consists of the fields shown below.

Field Configuration
Slave address
Function code
Exception code
CRC-16

The content of each field is explained below. The function code of the exception response is the sum of the function code of the query and 80h. The exception code indicates the factor of the exception response.

Function Code	
Query	Exception Response
0 1 h	8 1 h
0 3 h	8 3 h
0 5 h	8 5 h
0 6 h	8 6 h
0 F h	8 F h
1 0 h	9 0 h

Exception Code	
Code	Description
0 1 h	The specified function is not supported.
0 2 h	The specified function is not found.
0 3 h	The format of the specified data is not acceptable.
2 1 h	The data to be written in a holding register is outside the inverter.
2 2 h	The specified functions are not available to the inverter. • Function to change the content of a register that cannot be changed while the inverter is in service • Function to submit an ENTER command during running (UV) • Function to write in a register during tripping (UV) • Function to write in a read-only register (or coil)

Store New Register Data (ENTER command)

After being written in a selected holding register by the Write in Holding Register command (06h) or in selected holding registers by the Write in Holding Registers command (10h), new data is temporary and still outside the storage element of the inverter. If power to the inverter is shut off, this new data is lost and the previous data returns. The ENTER command is used to store this new data in the storage element of the inverter. Follow the instructions below to submit the ENTER command.

Submitting an ENTER Command:

- Write any data in all memory (of a holding register at 0900h) by the Write in Holding Register command [06h].

NOTE: The ENTER command takes much time to run. You can check its progress by monitoring the Data Writing signal (of a coil at 001Ah).

NOTE: The service life of the storage element of the inverter is limited (to about 100,000 write operations). Frequent use of the ENTER command may shorten its service life.

ModBus Data Listing

ModBus Coil List

The following tables list the primary coils for the inverter interface to the network. The table legend is given below.

- **Coil Number** - The network *register address offset* for the coil. The coil data is a single bit (binary) value.
- **Name** - The functional name of the coil
- **R/W** - The read-only (R) or read-write (R/W) access permitted to the inverter data
- **Description** - The meaning of each of the states of the coils

List of Coil Numbers			
Coil Number	Name	R/W	Description
0000h	(Reserved)	R	–
0001h	Run command	R/W	0…Stop 1…Run (enable when A003=03)
0002h	FW/RV command	R/W	0…FW 1…RV (enable when A003=03)
0003h	External trip (EXT)	R/W	0…No trip event 1…Trip occurred
0004h	Trip reset (RS)	R/W	0…No reset condition 1…Reset
0005h	(Reserved)	R	–
0006h	(Reserved)	R	–
0007h	Intelligent input terminal 1	R/W	0…OFF *1 1…ON
0008h	Intelligent input terminal 2	R/W	
0009h	Intelligent input terminal 3	R/W	
000Ah	Intelligent input terminal 4	R/W	
000Bh	Intelligent input terminal 5	R/W	
000Dh	(Not used)	–	–
000Eh	Run/Stop status	R	0…Stop (corresponds to D003 monitor) 1…Run
000Fh	FW/RV status	R	0…FW 1…RV
0010h	Inverter ready	R	0…Not ready 1…Ready
0011h	(Reserved)	R	–
0012h	(Reserved)	R	–
0013h	(Reserved)	R	–

List of Coil Numbers			
Coil Number	Name	R/W	Description
0014h	Alarm signal	R	0…Normal 1…Trip
0015h	PID deviation signal	R	0…OFF 1…ON
0016h	Overload signal	R	
0017h	Frequency arrival signal (set frequency or above)	R	
0018h	Frequency arrival signal (at constant speed)	R	
0019h	Run Mode signal	R	
001Ah	Data writing	R	0…Normal status 1…Writing
001Bh	CRC error	R	0…No error *2 1…Error
001Ch	Overrun error	R	
001Dh	Framing error	R	
001Eh	Parity error	R	
001Fh	Check sum error	R	

Note 1: ON usually when either the control circuit terminal board or a coil is ON. Among control circuit terminal board (intelligent input terminals) and coils, the control circuit terminal board has a high priority. If the master cannot reset the coil ON status due to a transmission line break, please turn ON and OFF the control circuit terminal board to make the coil to OFF status.

Note 2: The content of a transmission error is held until the error is reset. (The error can be reset while the inverter is running.)

ModBus Holding Registers

The following tables list the holding registers for the inverter interface to the network. The table legend is given below.

- **Function Code** - The inverter's reference code for the parameter or function (same as inverter keypad display)
- **Name** - The standard functional name of the parameter or function for the inverter
- **R/W** - The read-only(R) or read-write access(R/W) permitted to the data in the inverter
- **Description** - How the parameter or setting works (same as Chapter 3 description).
- **Reg.** - The network *register address offset* for the value. Some values have a high-byte and low-byte address.
- **Range** - The numerical range for the network value that is sent and/or received

TIP: The network values are binary integers. Since these values cannot have an embedded decimal point, for many parameters it represents the actual value (in engineering units) multiplied by a factor of 10 or 100. Network communications must use the listed range for network data. The inverter automatically divides received values by the appropriate factor in order to establish the decimal point for internal use. Likewise, the network host computer must apply the same factor when it needs to work in engineering units. However, when sending data to the inverter, the network host computer must scale values to the integer range listed for network communications.

- **Resolution** - This is the quantity represented by the LSB of the network value, in engineering units. When the network data range is greater than the inverter's internal data range, this 1-bit resolution will be fractional.

List of Holding Registers						
Func. Code	Name	R/W	Description	Network Data		
				Reg.	Range	Res.
–	Output frequency command	R/W	Inverter output frequency (set A001=03 to enable this network register), range is 0.0 to 400.0 Hz	0002h	0 to 4000	0.1 Hz
–	Inverter status	R	00...Initial status 01...(Reserved) 02...Stop Mode 03...Run Mode 04...Free-run stop (FRS) 05...Jogging 06...DC braking 07...Retry 08...Trip alarm 09...Under-voltage	0003h	0 to 9	–
–	Process Variable (PV)	R/W	PID loop PV value from the network (set A076=02 to enable this setting), range is 0.0 to 100.0%	0005h	0 to 1000	0.1%

The following table lists holding registers for the "D" Group Monitor Functions.

List of Holding Registers						
Func. Code	Name	R/W	Description	Network Data		
				Reg.	Range	Res.
D001	Output frequency monitor	R	Real-time display of output frequency to motor, from 0.0 to 400.0 Hz	1002h	0 to 4000	0.1 Hz
D002	Output current monitor *1	R	Filtered display of output current to motor (100 ms internal filter time constant), range is 0 to 200% of inverter rated current	1003h	0 to 2000	0.1%
D003	Rotation direction monitor	R	Three different indications: 00...Stop 01...Forward 02...Reverse	1004h	0,1,2	–
D004 (high)	Process Variable (PV), PID feedback monitor	R	Displays the scaled PID process variable (feedback) value (A075 is scale factor), range is 0.00 to 9999.00	1005h	0 to 999900	0.00% times const.
D004 (low)		R		1006h		
D005	Intelligent input terminal status	R	Displays the state of the intelligent input terminals [x], Bit 0 = [1] to Bit 4 = [5]	1007h	0 to 63	–
D006	Intelligent output terminal status	R	Displays the state of the intelligent output terminals [x], Bit 0 = [RUN], Bit 1 = [FA1],Bit 2 = [FA2], Bit 3 = [OL],Bit 4 = [OD], Bit5 = [AL],Bit8 = [DC], Bit9 = [FBV],Bit10= [NDc]	1008h	0 to 7	–
D007 (high)	Scaled output frequency monitor	R	Displays the output frequency scaled by the constant in B086. Decimal point indicates range: 0.00 to 39960.00	1009h	0 to 3996000	0.01 Hz times const.
D007 (low)		R		100Ah		
D013	Output voltage monitor	R	Voltage of output to motor, range is 0.00 to 200.00%	100Ch	0 to 20000	0.01%
D016 (high)	Cumulative operation RUN time monitor	R	Displays total time the inverter has been in RUN mode in hours. Range is 0 to 999999	100Eh	0 to 999999	1 hour
D016 (low)		R		100Fh		
D017 (high)	Cumulative power-on time monitor	R	Displays total time the inverter has been in RUN mode in hours. Range is 0 to 999999	1010h	0 to 999999	1 hour
D017 (low)		R		1011h		
D018	Fin temperature monitor	R	Display the Fin temperature in 0.0~200.0°C	116Ah	0 to 2000	0.1°C
D080	Trip counter	R	Number of trip events, range is 0 to 65535	0011h	0 to 65535	1 trip event
D102	DC voltage monitor	R	Voltage of DC bus inside inverter,Range is 0.0 to 999.9	116Ch	0 to 9999	0.1 V
D104	Electronic thermal monitor	R	Accumulated value of electronic thermal detection, range is from 0.0 to 100.0	116Dh	0 to 1000	0.1 %

Note 1: Assume that the inverter current rating is 1000 (for D002).

List of Holding Registers					
Func. Code	Name	R/W	Description	Network Data	
				Reg.	Res.
D081	Trip monitor 1	R	Trip monitor 1: factor code	0012h	–
		R	Frequency	0014h	0.1 Hz
		R	Current	0016h	0.1A
		R	Voltage	0017h	1.V
		R	Run time (high)	0018h	1. h
		R	Run time (low)	0019h	
		R	ON time (high)	001Ah	1. h
		R	ON time (low)	001Bh	
D082	Trip monitor 2	R	Trip monitor 2: factor code	001Ch	–
		R	Frequency	001Eh	0.1 Hz
		R	Current	0020h	0.1A
		R	Voltage	0021h	1.V
		R	Run time (high)	0022h	1. h
		R	Run time (low)	0023h	
		R	ON time (high)	0024h	1. h
		R	ON time (low)	0025h	
D083	Trip monitor 2	R	Trip monitor 3: factor code	0026h	–
		R	Frequency	0028h	0.1 Hz
		R	Current	002Ah	0.1A
		R	Voltage	002Bh	1.V
		R	Run time (high)	002Ch	1. h
		R	Run time (low)	002Dh	
		R	ON time (high)	002Eh	1. h
		R	ON time (low)	002Fh	

List of Holding Registers						
Func. Code	Name	R/W	Description	Network Data		
				Reg.	Range	Res.
F002 (high)	Acceleration (1) time setting *1	R/W	Standard default acceleration, range is 0.01 to 3000 sec.	1014h	1 to 300000	0.01 sec.
F002 (low)		R/W		1015h		
F202 (high)	Acceleration (1) time setting, 2nd motor *1	R/W	Standard default acceleration, 2nd motor, range is 0.01 to 3000 sec.	1501h	1 to 300000	0.01 sec.
F202 (low)		R/W		1502h		
F003 (high)	Deceleration (1) time setting *1	R/W	Standard default deceleration, range is 0.01 to 3000 sec.	1016h	1 to 300000	0.01 sec.
F003 (low)		R/W		1017h		
F203 (high)	Deceleration (1) time setting, 2nd motor *1	R/W	Standard default deceleration, 2nd motor, range is 0.01 to 3000 sec.	1503h	1 to 300000	0.01 sec.
F203 (low)		R/W		1504h		
F004	Keypad Run key routing	R/W	Two options; select codes: 00...Forward 01...Reverse	1018h	0, 1	–

Note 1: When the value is 10000 (100.0 seconds), a value in the second decimal place is ignored.

The following table lists the holding registers for the "A" Group Standard Functions.

List of Holding Registers						
Func. Code	Name	R/W	Description	Network Data		
				Reg.	Range	Res.
A001	Frequency source setting	R/W	Five options; select codes: 00...Keypad potentiometer 01...Control terminal 02...Function F001 setting 03...ModBus network input 10...Calculate function output	1019h	0 to 3, 10	–
A201	Frequency source setting, 2nd motor	R/W		150Ah	0 to 3, 10	–
A002	Run command source setting	R/W	Three options; select codes: 01...Control terminal 02...Run key on keypad, or digital operator 03...ModBus network input	101Ah	1, 2, 3	–
A202	Run command source setting, 2nd motor	R/W		150Bh	1, 2, 3	–
A003	Base frequency setting	R/W	Settable from 30 Hz to the maximum frequency	101Bh	30 to max. freq.	1 Hz
A203	Base frequency setting, 2nd motor	R/W	Settable from 30 Hz to the 2nd maximum frequency	150Ch	30 to max. freq.2	1 Hz
A004	Maximum frequency setting	R/W	Settable from the base frequency up to 400 Hz	101Ch	30 to 400	1 Hz
A204	Maximum frequency setting, 2nd motor	R/W	Settable from the 2nd base frequency up to 400 Hz	150Dh	30 to 400	1 Hz
A005	[AT] selection	R/W	Five options, select codes: 02... Select between [O] and keypad potentiometer 03... Select between [OI] and keypad potentiometer 04... Only [O] input active 05... Only [OI] input active	101Dh	0, 2, 3, 4, 5	–
A011	O–L input active range start frequency	R/W	The output frequency corresponding to the analog input range starting point, Range is 0.0 to 400.0	1020h	0 to 4000	0.1 Hz
A012	O–L input active range end frequency	R/W	The output frequency corresponding to the analog input range ending point, range is 0.0 to 400.0	1022h	0 to 4000	0.1 Hz
A013	O–L input active range start voltage	R/W	The starting point (offset) for the active analog input range, range is 0. to 100	1023h	0 to 100	1 %
A014	O–L input active range end voltage	R/W	The ending point (offset) for the active analog input range, range is 0. to 100.	1024h	0 to 100	1 %
A015	O–L input start frequency enable	R/W	Two options; select codes: 00...Use offset (A011 value) 01...Use 0 Hz	1025h	0, 1	–
A016	External frequency filter time constant	R/W	Range n = 1 to 16, where n = number of samples for average. Set 17 to use 16-samples for avg., plus deadband +0.1/-0.2Hz	1026h	1 to 17	1 sample

List of Holding Registers						
Func. Code	Name	R/W	Description	Network Data		
				Reg.	Range	Res.
A020	Multi-speed 0 setting	R/W	Defines the first speed of a multi-speed profile, range is 0.0 / start frequency to 400 Hz A020 = Speed 0 (1st motor)	1029h	0 / start freq. to 4000	0.1 Hz
A220	Multi-speed 0 setting 2nd motor	R/W	Defines the first speed of a multi-speed profile, range is 0.0 / start frequency to 400 Hz A220 = Speed 0 (2nd motor)	150Fh	0 / start freq. to 4000	0.1 Hz
A021	Multi-speed 1 setting	R/W	Defines 15 more speeds, range is 0.0 / start frequency to 400 Hz. A021= Speed 1... A035 = Speed 15	102Bh	0 / start freq. to 4000	0.1 Hz
A022	Multi-speed 2 setting	R/W		102Dh		
A023	Multi-speed 3 setting	R/W		102Fh		
A024	Multi-speed 4 setting	R/W		1031h		
A025	Multi-speed 5 setting	R/W		1033h		
A026	Multi-speed 6 setting	R/W		1035h		
A027	Multi-speed 7 setting	R/W		1037h		
A028	Multi-speed 8 setting	R/W		1039h		
A029	Multi-speed 9 setting	R/W		103Bh		
A030	Multi-speed 10 setting	R/W		103Dh		
A031	Multi-speed 11 setting	R/W		103Fh		
A032	Multi-speed 12 setting	R/W		1041h		
A033	Multi-speed 13 setting	R/W		1043h		
A034	Multi-speed 14 setting	R/W		1045h		
A035	Multi-speed 15 setting	R/W		1047h		
A038	Jog frequency setting	R/W	Defines limited speed for jog, range is 0.00 / start frequency to 9.99 Hz	1048h	0 / start freq. to 999	0.01 Hz
A039	Jog stop mode	R/W	Define how end of jog stops the motor; three options: 00...Free-run stop 01...Controlled deceleration 02...DC braking to stop	1049h	0, 1, 2	–
A041	Torque boost select	R/W	Two options: 00...Manual torque boost 01...Automatic torque boost	104Ah	0, 1	–
A241	Torque boost select, 2nd motor	R/W		1510h		
A042	Manual torque boost value	R/W	Can boost starting torque between 0 and 20% above normal V/f curve, range is 0.0 to 20.0%	104Bh	0 to 200	0.1 %
A242	Manual torque boost value, 2nd motor	R/W		1511h		
A043	Manual torque boost frequency adjustment	R/W	Sets the frequency of the V/f breakpoint A in graph (top of previous page) for torque boost, range is 0.0 to 50.0%	104Ch	0 to 500	0.1 %
A243	Manual torque boost frequency adjustment, 2nd motor	R/W		1512h		
A044	V/f characteristic curve selection	R/W	Two available V/f curves; two select codes: 00...Constant torque 01...Reduced torque 06...Reduced torque1	104Dh	0, 1, 6	–
A244	V/f characteristic curve selection, 2nd motor	R/W		1513h		
A045	V/f gain setting	R/W	Sets voltage gain of the inverter, range is 20. to 100.%	104Eh	20 to 100	1 %
A245	V/f gain setting, 2nd motor	R/W		1514h		

List of Holding Registers						
Func. Code	Name	R/W	Description	Network Data		
				Reg.	Range	Res.
A051	DC braking enable	R/W	Two options; select codes: 00...Disable 01... Enable 02... Frequency detection	1051h	0, 1, 2	–
A052	DC braking frequency setting	R/W	The frequency at which DC braking begins, range is from the start frequency (B082) to 60 Hz	1052h	(B082 x 10) to 600	0.1 Hz
A053	DC braking wait time	R/W	The delay from the end of controlled deceleration to start of DC braking (motor free runs until DC braking begins), range is 0.0 to 5.0 sec.	1053h	0 to 50	–
A054	DC braking force for deceleration	R/W	Level of DC braking force, settable from 0 to 100%	1054h	0 to 100	1 %
A055	DC braking time for deceleration	R/W	Sets the duration for DC braking, range is 0.0 to 60.0 seconds	1055h	0 to 600	0.1 sec
A056	DC braking / edge or level detection for [DB] input	R/W	Two options; select codes: 00... Edge detection 01... Level detection	1056h	0, 1	–
A061	Frequency upper limit setting	R/W	Sets a limit on output frequency less than the maximum frequency (A004). Range is from frequency lower limit (A062) to maximum frequency (A004). 0.0.. setting is disabled >0.1 setting is enabled	105Ah	(A062 x 10) to (A004 x 10), 0=disable >1=enable	0.1 Hz
A261	Frequency upper limit setting, 2nd motor	R/W	Sets a limit on output frequency less than the maximum frequency (A204). Range is from frequency lower limit (A262) to maximum frequency (A204). 0.0.. setting is disabled >0.1 setting is enabled	1517h	(A262 x 10) to (A204 x 10), 0=disable >1=enable	
A062	Frequency lower limit setting	R/W	Sets a limit on output frequency greater than zero. Range is start frequency (B082) to frequency upper limit (A061) 0.0 setting is disabled >0.0 setting is enabled	105Bh	(B082 x 10) to (A061 x 10), 0=disable >1=enable	0.1 Hz
A262	Frequency lower limit setting, 2nd motor	R/W	Sets a limit on output frequency greater than zero. Range is start frequency (B082) to frequency upper limit (A261) 0.0 setting is disabled >0.0 setting is enabled	1518h	(B082 x 10) to (A261 x 10), 0=disable >1=enable	
A063, A065, A067	Jump (center) frequency setting	R/W	Up to 3 output frequencies can be defined for the output to jump past to avoid motor resonances (center frequency) Range is 0.0 to 400.0 Hz	105Dh 1060h 1063h	0 to 4000	0.1 Hz
A064, A066, A068	Jump (hysteresis) frequency width setting	R/W	Defines the distance from the center frequency at which the jump around occurs Range is 0.0 to 10.0 Hz	105Eh 1061h 1064h	0 to 100	0.1 Hz

List of Holding Registers						
Func. Code	Name	R/W	Description	Network Data		
				Reg.	Range	Res.
A071	PID enable	R/W	Enables PID function, two option codes: 00 …PID Disable 01 …PID Enable	1068h	0, 1	–
A072	PID proportional gain	R/W	Proportional gain has a range of 0.2 to 5.0	1069h	2 to 50	0.1
A073	PID integral time constant	R/W	Integral time constant has a range of 0.0 to 150 seconds	106Ah	0 to 1500	0.1 sec
A074	PID derivative time constant	R/W	Derivative time constant has a range of 0.0 to 100 seconds	106Bh	0 to 10000	0.01 sec
A075	PV scale conversion	R/W	Process Variable (PV), scale factor (multiplier), range of 0.01 to 99.99	106Ch	1 to 9999	0.01
A076	PV source setting	R/W	Selects source of Process Variable (PV), option codes: 00 …[OI] terminal (current in) 01 …[O] terminal (voltage in) 02 …ModBus network 10 …Calculate function output	106Dh	0, 1, 2, 3	–
A077	Reverse PID action	R/W	Two option codes: 00 …PID input = SP-PV 01 …PID input = -(SP-PV)	106Eh	0, 1	–
A078	PID output limit	R/W	Sets the limit of PID output as percent of full scale, range is 0.0 to 100.0%	106Fh	0 to 1000	0.1 %
A081	AVR function select	R/W	Automatic (output) voltage regulation, selects from three type of AVR functions, three option codes: 00 …AVR enabled 01 …AVR disabled 02 …AVR enabled except during deceleration	1070h	0, 1, 2	–
A082	AVR voltage select	R/W	200V class inverter settings: 00…200 01…215 02…220 03…230 04…240 400V class inverter settings: 00…380 01…400 02…415 03…440 04…460 05…480	1071h	0 to 5	–
A085	Operation mode selection	R/W	Two option codes: 00…Normal operation 01…Energy-saver operation	1072h	0, 1	–
A086	Energy saving mode tuning	R/W	Range is 0.0 to 100 %	1073h	0 to 1000	0.1 %

List of Holding Registers						
Func. Code	Name	R/W	Description	Network Data		
				Reg.	Range	Res.
A092 (high)	Acceleration (2) time setting	R/W	Duration of 2nd segment of acceleration, range is: 0.01 to 3000 sec.	1074h	1 to 300000 *1	0.01 sec
A092 (low)		R/W		1075h		
A292 (high)	Acceleration (2) time setting, 2nd motor	R/W	Duration of 2nd segment of acceleration, 2nd motor, range is: 0.01 to 3000 sec.	1519h	1 to 300000 *1	0.01 sec
A292 (low)		R/W		151Ah		
A093 (high)	Deceleration (2) time setting	R/W	Duration of 2nd segment of deceleration, range is: 0.01 to 3000 sec.	1076h	1 to 300000 *1	0.01 sec
A093 (low)		R/W		1077h		
A293 (high)	Deceleration (2) time setting, 2nd motor	R/W	Duration of 2nd segment of deceleration, 2nd motor, range is: 0.01 to 3000 sec.	151Bh	1 to 300000 *1	0.01 sec
A293 (low)		R/W		151Ch		
A094	Select method to switch to Acc2/Dec2 profile	R/W	Two options for switching from 1st to 2nd accel/decel: 00 …2CH input from terminal 01 …Transition frequency	1078h	0, 1	–
A294	Select method to switch to Acc2/Dec2 profile, 2nd motor	R/W	Two options for switching from 1st to 2nd accel/decel: 00…2CH input from terminal 01…Transition frequency (2nd motor)	151Dh		
A095	Acc1 to Acc2 frequency transition point	R/W	Output frequency at which Accel1 switches to Accel2, range is 0.0 to 400.0 Hz	107Ah	0 to 4000	0.1 Hz
A295	Acc1 to Acc2 frequency transition point, 2nd motor	R/W	Output frequency at which Accel1 switches to Accel2, 2nd motor, range is 0.0 to 400.0 Hz	151Fh		
A096	Dec1 to Dec2 frequency transition point	R/W	Output frequency at which Decel1 switches to Decel2, range is 0.0 to 400.0 Hz	107Ch	0 to 4000	0.1 Hz
A296	Dec1 to Dec2 frequency transition point, 2nd motor	R/W	Output frequency at which Decel1 switches to Decel2, 2nd motor, range is 0.0 to 400.0 Hz	1521h		
A097	Acceleration curve selection	R/W	Set the characteristic curve of Acc1 and Acc2, two options: 00…linear 01…S-curve	107Dh	0, 1	–
A098	Deceleration curve selection	R/W	Set the characteristic curve of Dec1 and Dec2, two options: 00…linear 01…S-curve	107Eh	0, 1	–
A101	[OI]-[L] input active range start frequency	R/W	The output frequency corresponding to the analog input range starting point, range is 0.0 to 400.0 Hz	1080h	0 to 4000	0.1 Hz
A102	[OI]-[L] input active range end frequency	R/W	The output frequency corresponding to the current input range ending point, range is 0.0 to 400.0 Hz	1082h	0 to 4000	0.1 Hz
A103	[OI]-[L] input active range start current	R/W	The starting point (offset) for the current input range, range is 0. to 100.%	1083h	0 to 100	1 %

List of Holding Registers						
Func. Code	Name	R/W	Description	Network Data		
				Reg.	Range	Res.
A104	[OI]-[L] input active range end voltage	R/W	The ending point (offset) for the current input range, range is 0. to 100.%	1084h	0 to 100	1 %
A105	[OI]-[L] input start frequency enable	R/W	Two options; select codes: 00 …Use offset (A101 value) 01 …Use 0Hz	1085h	0, 1	–
A141	A input select for calculate function	R/W	Five options: 00…Digital operator 01…Keypad potentiometer 02…[O] input 03…[OI] input 04…Network variable	108Eh	0 to 4	–
A142	B input select for calculate function	R/W	Five options: 00…Digital operator 01…Keypad potentiometer 02…[O] input 03…[OI] input 04…Network variable	108Fh	0 to 4	–
A143	Calculation symbol	R/W	Calculates a value based on the A input source (A141 selects) and B input source (A142 selects). Three options: 00…ADD (A input + B input) 01…SUB (A input - B input) 02…MUL (A input * B input)	1090h	0, 1, 2	–
A145	ADD frequency	R/W	An offset value that is applied to the output frequency when the [ADD] terminal is ON. Range is 0.0 to 400.0 Hz	1091h	0 to 4000	0.1 Hz
A146	ADD direction select	R/W	Two options: 00…Plus (adds A145 value to the output frequency setting) 01…Minus (subtracts A145 value from the output frequency etting)	1093h	0, 1	–
A151	POT active range start frequency	R/W	The output frequency corresponding to the POT range starting point, range is 0.0 to 400.0 Hz	1095h	0 to 4000	0.1 Hz
A152	POT input active range end frequency	R/W	The output frequency corresponding to the POT range ending point, range is 0.0 to 400.0 Hz	1097h	0 to 4000	0.1 Hz
A153	POT input active range start	R/W	The starting point (offset) for the POT range, range is 0. to 100.%	1098h	0 to 100	1 %
A154	POT input active range end	R/W	The ending point (offset) for the POT range, range is 0. to 100.%	1099h	0 to 100	1 %
A155	POT input start frequency enable	R/W	Two options; select codes: 00…Use offset (A151 value) 01…Use 0Hz	109Ah	0, 1	–

Note 1: When the value is 10000 (100.0 seconds), a value in the second decimal place is ignored. (for A092/A292 and A093/A293).

The following table lists the holding registers for the "B" Group Fine Tuning Functions.

List of Holding Registers						
Func. Code	Name	R/W	Description	Network Data		
				Reg.	Range	Res.
B001	Selection of automatic restart mode	R/W	Select inverter restart method, Four option codes: 00…Alarm output after trip, no automatic restart 01…Restart at 0Hz 02…Resume operation after frequency matching 03…Resume previous freq. after freq. matching, then decelerate to stop and display trip info	10A5h	0, 1, 2, 3	–
B002	Allowable under-voltage power failure time	R/W	The amount of time a power input under-voltage can occur without tripping the power failure alarm. Range is 0.3 to 25 sec. If under-voltage exists longer than this time, the inverter trips, even if the restart mode is selected.	10A6h	3 to 250	0.1 sec
B003	Retry wait time before motor restart	R/W	Time delay after under-voltage condition goes away, before the inverter runs motor again. Range is 0.3 to 100 seconds.	10A7h	3 to 1000	0.1 sec
B004	Instantaneous power failure / under-voltage trip alarm enable	R/W	Two option codes: 00…Disable 01…Enable	10A8h	0, 1	–
B005	Number of restarts on power failure / under-voltage trip events	R/W	Two option codes: 00…Restart 16 times 01…Always restart	10A9h	0, 1	–
B011	Start freq to be used in case of freq pull-in restart	R/W	Three option codes: 00…freq at previous shutoff 01…start from max. Hz 02…start from set frequency	1170	0, 1, 2	–
B012	Level of electronic thermal setting	R/W	Set a level between 20% and 100% for the rated inverter current.	10ADh	2000 to 10000	0.01 %
B212	Level of electronic thermal setting, 2nd motor	R/W		1527h		
B013	Electronic thermal characteristic	R/W	Select from three curves, option codes: *1 00…Reduced torque 1 01…Constant torque 02… Reduced torque 2	10AEh	0, 1, 2	–
B213	Electronic thermal characteristic, 2nd motor	R/W		1528h		

List of Holding Registers						
Func. Code	Name	R/W	Description	Network Data		
				Reg.	Range	Res.
B021	Overload restriction operation mode	R/W	Select the operation mode during overload conditions, three options, option codes: 00…Disables 01…Enabled for acceleration and constant speed 02…Enabled for constant speed only	10B5h	0, 1, 2	–
B221	Overload restriction operation mode, 2nd motor			1529h		
B022	Overload restriction level setting	R/W	Sets the level for overload restriction, between 20% and 150% of the rated current of the inverter, setting resolution is 1% of rated current	10B6h	2000 to 15000	0.01%
B222	Overload restriction level setting, 2nd motor	R/W		152Ah		
B023	Deceleration rate at overload restriction	R/W	Sets the deceleration rate when inverter detects overload, range is 0.1 to 30.0, resolution 0.1	10B7h	1 to 300	0.1 sec
B223	Deceleration rate at overload restriction, 2nd motor	R/W		152Bh		
B028	Source of overload restriction selection	R/W	Two option codes: 00…set value of B022 01…[O] input	10BBh	0, 1	–
B228	Source of overload restriction selection, 2nd motor	R/W	Two option codes: 00…set value of B222 01…[O] input	152Ch		
B029	Deceleration rate of frequency pull-in restart setting	R/W	Sets the deceleration rate when frequency pull-in restart, range is 0.1 to 3000.0, resolution 0.1	1171h	1 to 30000	0.1 sec
B030	Current level of frequency pull-in restart setting	R/W	Sets the current level of frequency pull-in restart, range is 0.2*inverter rated current to 2.0*inverter rated current, resolution 0.1	1172h	200 to 20000	0.01%
B031	Software lock mode selection	R/W	Prevents parameter changes, in four options, option codes: 00…all parameters except B031 are locked when [SFT] terminal is ON 01…all parameters except B031 and output frequency F001 are locked when [SFT] terminal is ON 02…all parameters except B031 are locked 03…all parameters except B031 and output frequency F001 are locked 10…High level access including B031	10BCh	0, 1, 2, 3	–
B050	Selection of the non stop operation	R/W	Two option codes: 00…Disabled 01…Enabled	10C9h	0, 1	–
B051	Non stop operation start voltage setting	R/W	Setting of DC bus voltage to start non stop operation. Range is 0.0 to 1000.0	10CAh	0 to 10000	0.1 V

List of Holding Registers						
Func. Code	Name	R/W	Description	Network Data		
				Reg.	Range	Res.
B052	OV-LAD Stop level of non stop operation setting	R/W	Setting the OV-LAD stop level of non stop operation. Range is 0.0 to 1000.0	10CBh	0 to 10000	0.1 V
B053	Deceleration time of non stop operation setting	R/W	Range is 0.1 to 3000	10CCh	1 to 30000	0.1 sec
B054	Frequency width of quick deceleration setting	R/W	Setting of the first quick deceleration width. Range is 0.0 to 10.0	10CEh	0 to 100	0.1 Hz
B055	DC bus AVR P-gain	R/W	Proportional gain adjustment for DC bus AVR function. Range is: 0.2 to 5.0	1173h	2 to 50	0.1
B056	DC bus AVR I-time	R/W	Integration time adjustment for DC bus AVR function. Range is: 0.0 to 150.0	1174h	0 to 1500	0.1s
B080	[AM]analog signal gain	R/W	Adjust of analog output at terminal [AM], range is 0 to 255	10CFh	0 to 255	–
B082	Start frequency adjustment	R/W	Sets the starting frequency for the inverter output, range is 0.5 to 9.9 Hz	10D1h	5 to 99	0.1 Hz
B083	Carrier frequency setting	R/W	Sets the PWM carrier (internal switching frequency), range is 2.0 to 12.0 kHz	10D2h	20 to 120	0.1 Hz
B084	Initialization mode (parameters or trip history)	R/W	Select the type of initialization to occur, three option codes: 00…Trip history clear 01…Parameter initialization 02… Trip history clear and parameter initialization	10D3h	0, 1, 2	–
B085	Country for initialization	R/W	Select default parameter values for country on initialization, three option codes: 00…Japan 01…Europe 02…US	10D4h	–	–

List of Holding Registers						
Func. Code	Name	R/W	Description	Network Data		
				Reg.	Range	Res.
B086	Frequency scaling conversion factor	R/W	Specify a constant to scale the displayed frequency for D007 monitor, range is 0.1 to 99.9	10D5h	1 to 999	0.1
B087	STOP key enable	R/W	Select whether the STOP key on the keypad is enabled, two option codes: 00…Enabled 01…Disabled	10D6h	0, 1	–
B088	Restart mode after FRS	R/W	Selects how the inverter resumes operation with free-run stop (FRS) is cancelled, two options: 00…Restart from 0Hz 01…Restart from frequency detected from real speed of motor (frequency matching)	10D7h	0, 1	–
B089	Monitor display select for networked inverter	R/W	Selects the parameter displayed on the keypad display when the inverter is networked, 7 options: 01…Output frequency monitor 02…Output current monitor 03…Rotation direction monitor 04…Process variable (PV), PID feedback monitor 05…Intelligent input terminal status 06…Intelligent output terminal status 07…Scaled output frequency monitor	10D8h	1 to 7	–
B091	Stop mode selection	R/W	Select how the inverter stops the motor, two option codes: 00…DEC (decelerate to stop) 01…FRS (free run to stop)	10DAh	0, 1	–
B092	Cooling fan control	R/W	Selects when the fan is ON per inverter operation, three options: 00…Fan is always ON 01…Fan is ON during run, OFF during stop (5 min. delay from ON to OFF) 02…Fan is temperature controlled	10DBh	0, 1, 2	–
B130	Over-voltage LADSTOP enable	R/W	Pauses deceleration ramp when DC bus voltage rises above threshold level, in order to avoid over-voltage trip. Two option codes: 00…Disable 01…Enable	10F5h	0, 1	–
B131	Over-voltage LADSTOP level	R/W	Sets the threshold level for over-voltage LADSTOP. When the DC bus voltage is above the threshold value, the inverter stops deceleration until the DC bus voltage is less than the threshold setting again. Two voltage ranges with 1V resolution: 330 to 395V (200V class) 660 to 790V (400V class)	10F6h	330 to 395, 660 to 790	1 V

List of Holding Registers						
Func. Code	Name	R/W	Description	Network Data		
				Reg.	Range	Res.
B133	DC bus AVR selection	R/W	Two option codes: 00…Disabled 01…Enabled	1176h	0, 1	–
B134	Threshold voltage of DC bus AVR setting	R/W	Setting of threshold voltage of DC bus voltage to start DC bus AVR function. Range is: 200V class…330 to 395 400V class…660 to 790	1177h	330 to 395, 660 to 790	1 V
B140	Over-current trip suppression	R/W	Two option codes: 00…Disable 01…Enable	10F7h	0, 1	–
B150	Carrier mode	R/W	Automatically reduces the carrier frequency as the ambient temperature increases. 00…Disable 01…Enable	10F8h	0, 1	–
B151	Selection of RDY function	R/W	Select Ready function. 00…Disable 01…Enable	10F9h	0, 1	–

Note 1: Assume that the inverter current rating is 10000 (for B013/B213).

The following table lists the holding registers for the "C" Group Intelligent Input Functions.

List of Holding Registers						
Func. Code	Name	R/W	Description	Network Data		
				Reg.	Range	Res.
C001	Terminal [1] function	R/W	See "Input Terminal Configuration" on page 3-49	1103h	0, 1, 2, 3, 4, 5, 6, 7, 8, 9, 11, 12, 13, 15, 16, 18, 19, 20, 21, 22, 23, 24, 27, 28, 29, 31, 50, 51, 52, 53, 64, 255	–
C201	Terminal [1] function, 2nd motor	R/W		1532h		
C002	Terminal [2] function	R/W		1104h		
C202	Terminal [2] function, 2nd motor	R/W		1533h		
C003	Terminal [3] function	R/W		1105h		
C203	Terminal [3] function, 2nd motor	R/W		1534h		
C004	Terminal [4] function	R/W		1106h		
C204	Terminal [4] function, 2nd motor	R/W		1535h		
C005	Terminal [5] function	R/W		1107h		
C205	Terminal [5] function, 2nd motor	R/W		1536h		
C011	Terminal [1] active state	R/W	Select logic conversion, two option codes: 00…normally open [NO] 01…normally closed [NC]	110Bh	0, 1	–
C012	Terminal [2] active state	R/W		110Ch	0, 1	–
C013	Terminal [3] active state	R/W		110Dh	0, 1	–
C014	Terminal [4] active state	R/W		110Eh	0, 1	–
C015	Terminal [5] active state	R/W		110Fh	0, 1	–
C021	Terminal [11] function	R/W	See "Output Terminal Configuration" on page 3-54	1114h	0, 1, 2, 3, 4, 5, 6, 7, 8, 9, 10, 43	–
C026	Alarm relay terminal function	R/W		1119h		–
C028	[AM] signal selection	R/W	Two available functions: 00…motor speed 01…motor current	111Bh	0, 1	–
C031	Terminal [11] active state	R/W	Select logic conversion: 00…normally open [NO] 01…normally closed [NC]	111Dh	0, 1	–
C036	Alarm relay active state	R/W	Select logic conversion: 00…normally open [NO] 01…normally closed [NC]	1122h	0, 1	–
C038	Output mode of low load detection signal	R/W	Three option codes: 00…Disabled 01…During acceleration, deceleration and constant speed 02…During constant speed only	1178h	0, 1, 2	–
C039	Low load detection level	R/W	Set the level of low load detection, range is 0.0 to 2.0*rated current	1179h	0 to 20000	0.01%
C041	Overload level setting	R/W	Sets the overload signal level between 0% and 200% (from 0 to two time the rated current of the inverter)	1124h	0 to 20000	0.01%
C241	Overload level setting, 2nd motor	R/W		153Ah		
C042	Frequency arrival setting for acceleration	R/W	Sets the frequency arrival setting threshold for the output frequency during acceleration, range is 0.0 to 400.0 Hz	1126h	0 to 4000 *1	0.1 Hz
C043	Frequency arrival setting for deceleration	R/W	Sets the frequency arrival setting threshold for the output frequency during deceleration, range is 0.0 to 400.0 Hz	1128h	0 to 4000	0.1 Hz

List of Holding Registers						
Func. Code	Name	R/W	Description	Network Data		
				Reg.	Range	Res.
C044	PID deviation level setting	R/W	Sets the allowable PID loop error magnitude (absolute value), SP-PV, range is 0.0 to 100%, resolution is 0.1%	1129h	0 to 1000	0.1 %
C052	PID FBV function high limit	R/W	When the PV exceeds this value, the PID loop turns OFF the PID second stage output, range is 0.0 to 100%	112Eh	0 to 1000	0.1 %
C053	PID FBV function variable low limit	R/W	When the PV goes below this value, the PID loop turns ON the PID second stage output, range is 0.0 to 100%	112Fh	0 to 1000	0.1 %
C070	Selection of OPE / ModBus	–	NOTE: These network settings are not accessible to ModBus. Use the inverter keypad or digital operator to edit. Refer to "Network Communication Settings" on page 3–60.	1137h	2, 3	–
C071	Communication speed selection	–		1138h	–	–
C072	Node allocation	–		1139h	–	–
C074	Communication parity selection	–		113Bh	–	–
C075	Communication stop bit selection	–		113Ch	–	–
C076	Communication error select	–		113Dh	–	–
C077	Communication error time-out	–		113Eh	–	–
C078	Communication wait time	–		113Fh	–	–
C081	O input span calibration	R/W	Scale factor between the external frequency command on terminals L–O (voltage input) and the frequency output, range is 0.0 to 200%	1141h	0 to 2000	0.1 %
C082	OI input span calibration	R/W	Scale factor between the external frequency command on terminals L–OI (voltage input) and the frequency output, range is 0.0 to 200%	1142h	0 to 2000	0.1 %
C086	AM offset calibration	R/W	Offset adjustment of AM output. Range is 0.0 to 10.0 Adjust together with B080 (AM gain adjustment)	1145h	0 to 100	0.1 V
C091	Debug mode enable	–	Displays debug parameters. Two option codes: 00…Disable 01…Enable	–	–	–
C101	Up/Down memory mode selection		Controls speed setpoint for the inverter after power sycle. Two option codes: 00…Clear last frequency (return to default frequency F001) 01…Keep last frequency adjusted by UP/DWN	1149h	0, 1	–

List of Holding Registers						
Func. Code	Name	R/W	Description	Network Data		
				Reg.	Range	Res.
C102	Reset selection		Determines response to Reset input [RS]. Three option codes: 00…Cancel trip state at input signal ON transition, stops inverter if in Run Mode 01…Cancel trip state at signal OFF transition, stops inverter if in Run Mode 02…Cancel trip state at input ON transition, no effect if in Run Mode	114Ah	0, 1, 2	–
C141	Input A select for logic output	R/W	See "Output Logic and Timing" on page 3–63	1150h	0, 1, 2, 3, 4, 5, 6, 7, 8, 10, 43	–
C142	Input B select for logic output	R/W		1151h		
C143	Logic function select	R/W	Applies a logic function to calculate [LOG] output state, Three options: 00…[LOG] = A AND B 01…[LOG] = A OR B 02…[LOG] = A XOR B	1152h	0, 1, 2	–

List of Holding Registers						
Func. Code	Name	R/W	Description	Network Data		
				Reg.	Range	Res.
C144	Terminal [11] ON delay	R/W	Range is 0.0 to 100.0 sec.	1153h	0 to 1000	0.1 sec
C145	Terminal [11] OFF delay	R/W	Range is 0.0 to 100.0 sec.	1154h	0 to 1000	0.1 sec
C148	Output relay ON delay	R/W	Range is 0.0 to 100.0 sec.	1157h	0 to 1000	0.1 sec
C149	Output relay OFF delay	R/W	Range is 0.0 to 100.0 sec.	1158h	0 to 1000	0.1 sec

Note 1: Assume that the inverter current rating is 10000 (for C041).

The following table lists the holding registers for the "H" Group Motor Constants.

List of Holding Registers						
Func. Code	Name	R/W	Description	Network Data		
				Reg.	Range	Res.
H003	Motor capacity	R/W	0…0.20kW 1…0.37kW 2…0.40kW 3…0.55 kW 4…0.75 kW 5…1.10 kW 6…1.50 kW 7…2.2 kW 8…3.0 kW 9…3.7 kW 10…4.0 kW 11…5.5 kW 12…7.5 kW	1165h	0 to 12	–
H203	Motor capacity, 2nd motor	R/W		1541h	0 to 12	–
H004	Motor poles setting	R/W	Four selections: 2 / 4 / 6 / 8	1166h	2, 4, 6, 8	1 pole
H204	Motor poles setting, 2nd motor	R/W		1542h	2, 4, 6, 8	1 pole
H006	Motor stabilization constant	R/W	Motor constant (factory set), range is 0 to 255	1168h	0 to 255	1
H206	Motor stabilization constant, 2nd motor	R/W		1544h	0 to 255	1

Drive Parameter Setting Tables

C

In This Appendix… **page**

- **Introduction** **2**
- **Parameter Settings for Keypad Entry** **2**

Introduction

This appendix lists the user-programmable parameters for the X2002 series inverters and the default values for European and U.S. product types. The right-most column of the tables is blank, so you can record values you have changed from the default. This involves just a few parameters for most applications. This appendix presents the parameters in a format oriented toward the keypad on the inverter.

Parameter Settings for Keypad Entry

X2002 series inverters provide many functions and parameters that can be configured by the user. We recommend that you record all parameters that have been edited, in order to help in troubleshooting or recovery from a loss of parameter data.

Inverter model	X200	
MFG. No.		

This information is printed on the specification label located on the right side of the inverter

Main Profile Parameters

NOTE:. Mark "✓" in B031=10 shows the accessible parameters when B031 is set "10", high level access.

"F" Group Parameters		Default Setting		B031 =10	User Setting
Func. Code	Name	-FEF2 (EU)	-FU2 (USA)		
F001	Output frequency setting	0.0	0.0	✓	
F002	Acceleration (1) time setting	10.0	10.0	✓	
F202	Acceleration (1) time setting, 2nd motor	10.0	10.0	✓	
F003	Deceleration (1) time setting	10.0	10.0	✓	
F203	Deceleration (1) time setting, 2nd motor	10.0	10.0	✓	
F004	Cumulative power-on time monitor	00	00	✕	

Standard Functions

NOTE:. Mark "✓" in B031=10 shows the accessible parameters when B031 is set "10", high level access.

"A" Group Parameters		Default Setting		B031 =10	User Setting
Func. Code	Name	-FEF2 (EU)	-FU2 (USA)		
A001	Frequency source setting	01	00	✕	
A201	Frequency source setting, 2nd motor	01	00	✕	
A002	Run command source setting	01	02	✕	
A202	Run command source setting, 2nd motor	01	02	✕	
A003	Base frequency setting	50.0	60.0	✕	
A203	Base frequency setting, 2nd motor	50.0	60.0	✕	
A004	Maximum frequency setting	50.0	60.0	✕	
A204	Maximum frequency setting, 2nd motor	50.0	60.0	✕	
A005	[AT] selection	02	02	✓	
A011	Pot./O-L input active range start frequency	0.0	0.0	✓	
A012	Pot./O-L input active range end frequency	0.0	0.0	✓	
A013	Pot./O-L input active range start voltage	0.	0.	✓	
A014	Pot./O-L input active range end voltage	100.	100.	✓	
A015	Pot./O-L input start frequency enable	01	01	✓	
A016	External frequency filter time constant	8.	8.	✓	
A020	Multi-speed 0 setting	0.0	0.0	✓	
A220	Multi-speed 0 setting, 2nd motor	0.0	0.0	✓	
A021	Multi-speed 1 setting	0.0	0.0	✓	
A022	Multi-speed 2 setting	0.0	0.0	✓	
A023	Multi-speed 3 setting	0.0	0.0	✓	
A024	Multi-speed 4 setting	0.0	0.0	✓	
A025	Multi-speed 5 setting	0.0	0.0	✓	
A026	Multi-speed 6 setting	0.0	0.0	✓	
A027	Multi-speed 7 setting	0.0	0.0	✓	
A028	Multi-speed 8 setting	0.0	0.0	✓	
A029	Multi-speed 9 setting	0.0	0.0	✓	
A030	Multi-speed 10 setting	0.0	0.0	✓	
A031	Multi-speed 11 setting	0.0	0.0	✓	
A032	Multi-speed 12 setting	0.0	0.0	✓	
A033	Multi-speed 13 setting	0.0	0.0	✓	
A034	Multi-speed 14 setting	0.0	0.0	✓	
A035	Multi-speed 15 setting	0.0	0.0	✓	
A038	Jog frequency setting	1.00	1.00	✓	
A039	Jog stop mode	00	00	✓	
A041	Torque boost select	00	00	✕	
A241	Torque boost select, 2nd motor	00	00	✕	
A042	Manual torque boost value	1.8	1.8	✓	
A242	Manual torque boost value, 2nd motor	0.0	0.0	✓	

"A" Group Parameters		Default Setting		B031 =10	User Setting
Func. Code	Name	-FEF2 (EU)	-FU2 (USA)		
A043	Manual torque boost frequency adjustment	10.0	10.0	✓	
A243	Manual torque boost frequency adjustment, 2nd motor	0.0	0.0	✓	
A044	V/f characteristic curve selection	00	00	✕	
A244	V/f characteristic curve selection, 2nd motor	00	00	✕	
A045	V/f gain setting	100.	100.	✓	
A245	V/f gain setting, 2nd motor	100.	100.	✓	
A051	DC braking enable	00	00	✓	
A052	DC braking frequency setting	0.5	0.5	✓	
A053	DC braking wait time	0.0	0.0	✓	
A054	DC braking force for deceleration	0.	0.	✓	
A055	DC braking time for deceleration	0.0	0.0	✓	
A056	DC braking / edge or level detection for [DB] input	01	01	✓	
A061	Frequency upper limit setting	0.0	0.0	✓	
A261	Frequency upper limit setting, 2nd motor	0.0	0.0	✓	
A062	Frequency lower limit setting	0.0	0.0	✓	
A262	Frequency lower limit setting, 2nd motor	0.0	0.0	✓	
A063, A065, A067	Jump (center) frequency setting	0.0 0.0 0.0	0.0 0.0 0.0	✓	
A064, A066, A068	Jump (hysteresis) frequency width setting	0.5 0.5 0.5	0.5 0.5 0.5	✓	
A071	PID enable	00	00	✓	
A072	PID proportional gain	1.0	1.0	✓	
A073	PID integral time constant	1.0	1.0	✓	
A074	PID derivative time constant	0.0	0.0	✓	
A075	PV scale conversion	1.00	1.00	✓	
A076	PV source setting	00	00	✓	
A077	Reverse PID action	00	00	✓	
A078	PID output limit	0.0	0.0	✓	
A081	AVR function select	00	00	✕	
A082	AVR voltage select	230/400	230/460	✕	
A085	Operation mode selection	00	00	✕	
A086	Energy saving mode tuning	50.0	50.0	✕	
A092	Acceleration (2) time setting	15.00	15.00	✓	
A292	Acceleration (2) time setting, 2nd motor	15.00	15.00	✓	
A093	Deceleration (2) time setting	15.00	15.00	✓	
A293	Deceleration (2) time setting, 2nd motor	15.00	15.00	✓	

"A" Group Parameters		Default Setting		B031 =10	User Setting
Func. Code	Name	-FEF2 (EU)	-FU2 (USA)		
A094	Select method to switch to Acc2/Dec2 profile	00	00	✕	
A294	Select method to switch to Acc2/Dec2 profile, 2nd motor	00	00	✕	
A095	Acc1 to Acc2 frequency transition point	0.0	0.0	✕	
A295	Acc1 to Acc2 frequency transition point, 2nd motor	0.0	0.0	✕	
A096	Dec1 to Dec2 frequency transition point	0.0	0.0	✕	
A296	Dec1 to Dec2 frequency transition point, 2nd motor	0.0	0.0	✕	
A097	Acceleration curve selection	00	00	✕	
A098	Deceleration curve selection	00	00	✕	
A101	[OI]-[L] input active range start frequency	0.0	0.0	✓	
A102	[OI]-[L] input active range end frequency	0.0	0.0	✓	
A103	[OI]-[L] input active range start current	0.	0.	✓	
A104	[OI]-[L] input active range end voltage	100.	100.	✓	
A105	[OI]-[L] input start frequency enable	01	01	✓	
A141	A input select for calculate function	01	01	✓	
A142	B input select for calculate function	02	02	✓	
A143	Calculation symbol	00	00	✓	
A145	ADD frequency	0.0	0.0	✓	
A146	ADD direction select	00	00	✓	
A151	POT active range start frequency	0.0	0.0	✓	
A152	POT input active range end frequency	0.0	0.0	✓	
A153	POT input active range start	0.	0.	✓	
A154	POT input active range end	100.	100.	✓	
A155	POT input start frequency enable	01	01	✓	

Fine Tuning Functions

"B" Group Parameters		Default Setting		B031 =10	User Setting
Func. Code	Name	-FEF2 (EU)	-FU2 (USA)		
B001	Selection of automatic restart mode	00	00	✓	
B002	Allowable under-voltage power failure time	1.0	1.0	✓	
B003	Retry wait time before motor restart	1.0	1.0	✓	
B004	Instantaneous power failure / under-voltage trip alarm enable	00	00	✓	
B005	Number of restarts on power failure / under-voltage trip events	00	00	✓	
B011	Start freq to be used in case of freq matching restart	00	00	✕	
B012	Level of electronic thermal setting	Rated current for each inverter		✓	
B212	Level of electronic thermal setting, 2nd motor	Rated current for each inverter		✓	
B013	Electronic thermal characteristic	01	01	✓	
B213	Electronic thermal characteristic, 2nd motor	01	01	✓	
B021	Overload restriction operation mode	01	01	✓	
B221	Overload restriction operation mode, 2nd motor	01	01	✓	
B022	Overload restriction level setting	Rated current x 1.5		✓	
B222	Overload restriction operation mode, 2nd motor	Rated current x 1.5		✓	
B023	Deceleration rate at overload restriction	1.0	30.0	✓	
B223	Overload restriction operation mode, 2nd motor	1.0	30.0	✓	
B028	Source of overload restriction selection	00	00		
B228	Source of overload restriction selection, 2nd motor	00	00	✓	
B029	Deceleration rate of frequency matching restart setting	0.5	0.5	✕	
B030	Current level of frequency matching restart setting	Rated current		✕	
B031	Software lock mode selection	01	01	✓	
B050	Selection of the non stop operation	00	00	✓	
B051	Non stop operation start voltage setting	0.0	0.0	✓	
B052	OV-LAD Stop level of non stop operation setting	0.0	0.0	✕	
B053	Deceleration time of non stop operation setting	1.0	1.0	✕	
B054	Frequency width of quick deceleration setting	0.0	0.0	✕	
B055	DC bus AVR P-gain	0.2	0.2	✓	
B056	DC bus AVR I-time	0.2	0.2	✓	

"B" Group Parameters		Default Setting		B031 =10	User Setting
Func. Code	Name	-FEF2 (EU)	-FU2 (USA)		
B080	[AM]analog signal gain	100.	100.	✓	
B082	Start frequency adjustment	0.5	0.5	✓	
B083	Carrier frequency setting	3.0	3.0	✕	
B084	Initialization mode (parameters or trip history)	00	00	✕	
B085	Country for initialization	01	02	✕	
B086	Frequency scaling conversion factor	1.0	1.0	✓	
B087	STOP key enable	00	00	✓	
B088	Restart mode after FRS	00	00	✓	
B089	Monitor display select for networked inverter	01	01	✓	
B091	Stop mode selection	00	00	✕	
B092	Cooling fan control	00	00	✕	
B130	Over-voltage LADSTOP enable	00	00	✓	
B131	Over-voltage LADSTOP level	380 / 760	380 / 760	✓	
B133	DC bus AVR selection	00	00	✓	
B134	Threshold voltage of DC bus AVR setting	380/760	380/760	✓	
B140	Over-current trip suppression	00	00	✓	
B150	Carrier mode	00	00	✓	
B151	Selection of RDY function	00	00	✓	

Intelligent Terminal Functions

"C" Group Parameters		Default Setting		B031 =10	User Setting
Func. Code	Name	-FEF2 (EU)	-FU2 (USA)		
C001	Terminal [1] function	00	00	✕	
C201	Terminal [1] function, 2nd motor	00	00	✕	
C002	Terminal [2] function	01	01	✕	
C202	Terminal [2] function, 2nd motor	01	01	✕	
C003	Terminal [3] function	02	16	✕	
C203	Terminal [3] function, 2nd motor	02	16	✕	
C004	Terminal [4] function	03	13	✕	
C204	Terminal [4] function, 2nd motor	03	13	✕	
C005	Terminal [5] function	18	18	✕	
C205	Terminal [5] function, 2nd motor	18	18	✕	
C011	Terminal [1] active state	00	00	✕	
C012	Terminal [2] active state	00	00	✕	
C013	Terminal [3] active state	00	00	✕	
C014	Terminal [4] active state	00	01	✕	
C015	Terminal [5] active state	00	00	✕	
C021	Terminal [11] function	01	01	✕	
C026	Alarm relay terminal function	05	05	✕	
C028	[AM] signal selection	00	00	✓	
C031	Terminal [11] active state	00	00	✕	
C036	Alarm relay active state	01	01	✕	
C038	Output mode of low load detection signal	01	01	✓	
C039	Low load detection level	Rated current for each inverter model		✓	
C041	Overload level setting	Rated current for each inverter model		✓	
C241	Overload level setting, 2nd motor	Rated current for each inverter model		✓	
C042	Frequency arrival setting for acceleration	0.0	0.0	✓	
C043	Frequency arrival setting for deceleration	0.0	0.0	✓	
C044	PID deviation level setting	3.0	3.0	✓	
C052	PID FBV function high limit	100.0	100.0	✓	
C053	PID FBV function variable low limit	0.0	0.0	✓	
C070	Selection of OPE / ModBus	02	02	✓	
C071	Communication speed selection	06	04	✓	
C072	Node allocation	1.	1.	✓	
C074	Communication parity selection	00	00	✓	
C075	Communication stop bit selection	1	1	✓	
C076	Communication error select	02	02	✓	
C077	Communication error time-out	0.00	0.00	✓	
C078	Communication wait time	0.	0.	✓	
C081	O input span calibration	100.0	100.0	✓	
C082	OI input span calibration	100.0	100.0	✓	

"C" Group Parameters		Default Setting		B031 =10	User Setting
Func. Code	Name	-FEF2 (EU)	-FU2 (USA)		
C086	AM offset calibration	0.0	0.0	✓	
C091	Debug mode enable	00	00	✓	
C101	Up/Down memory mode selection	00	00	✓	
C102	Reset selection	00	00	✓	
C141	Input A select for logic output	00	00	✕	
C142	Input B select for logic output	01	01	✕	
C143	Logic function select	00	00	✕	
C144	Terminal [11] ON delay	0.0	0.0	✓	
C145	Terminal [11] OFF delay	0.0	0.0	✓	
C148	Output relay ON delay	0.0	0.0	✓	
C149	Output relay OFF delay	0.0	0.0	✓	

Motor Constants Functions

"H" Group Parameters		Default Setting		B031 =10	User Setting
Func. Code	Name	-FEF2 (EU)	-FU2 (USA)		
H003	Motor capacity	Specified by the capacity of each inverter model		✕	
H203	Motor capacity, 2nd motor			✕	
H004	Motor poles setting	4	4	✕	
H204	Motor poles setting, 2nd motor	4	4	✕	
H006	Motor stabilization constant	100	100	✓	
H206	Motor stabilization constant, 2nd motor	100	100	✓	

Expansion Card Functions

"P" parameters will be appeared when the expansion option is connected.

"P" Group Parameters		Default Setting		B031 =10	User Setting
Func. Code	Name	-FEF2 (EU)	-FU2 (USA)		
P044	Network comm. Watchdog timer	1.00	1.00	✕	
P045	Inverter action on network comm error	01	01	✕	
P046	Polled I/O output instance number	21	21	✕	
P047	Polled I/O input instance number	71	71	✕	
P048	Inverter action on network idle mode	01	01	✕	
P049	Network motor poles setting for RPM	0	0	✕	

CE-EMC Installation Guidelines

D

In This Appendix… **page**

- **CE-EMC Installation Guidelines** **2**
- **Hitachi EMC Recommendations** **6**

CE-EMC Installation Guidelines

You are required to satisfy the EMC directive (89/336/EEC) when using an X200₂ inverter in an EU country. The X200₂ series inverters for European market (-SFEF2 and –HFEF2 models) have integrated filter complies to EN61800-3 as shown below.

Model	EMC requirements	LVD requirements
200V class (-SFEF2 models)	EN61800-3 category C1	EN61800-5-1:2003
400V class (-HFEF2 models)	EN61800-3 category C2	

To satisfy the EMC directive and to comply with standard, follow the guidelines in this section. Following table shows the compliance condition for reference.

Model	Cat.	Output f	Carrier f	Motor cable
200V class (-SFEF2 models)	C1	5~50Hz	3kHz	5m (shielded)
400V class (-HFEF2 models)	C2			5m (shielded)

Important notes

1. Input choke is required to comply with EMC directive from the harmonic distortion point of view (IEC 61000-3-2 and 4).
2. If the motor cable length exceeds 5m, use output choke to avoid unexpected problem due to the leakage current from the motor cable.
3. European version –SFEF2 and –HFEF2 have integrated EMC filter. And the filter contains Y-capacitors connected to earth. That means the leakage current from the Y-capacitors may effect on the Earth Leakage Breaker (ELB) at input side. Please refer to the following table to help selecting ELB. Note that the values are nominal ones only flow via the capacitor. Leakage current from the motor cable and motor should also be considered when selecting the ELB. Actual value may be different depending on your system.

Model	Earth leakage current @50Hz 200V [mA rms]	
	Neutral point earthed	One phase earthed
X200-002~004SFEF2	4.2	
X200-005~022SFEF2	8.3	

Model	Earth leakage current @50Hz 400V [mA rms]	
	Neutral point earthed	One phase earthed
X200-004~040HFEF2	3.6	8.7
X200-055~075HFEF2	35.7	80.4

The values are almost proportional to the input voltage.

4. As user you must ensure that the HF (high frequency) impedance between adjustable frequency inverter, filter, and ground is as small as possible.
   - Ensure that the connections are metallic and have the largest possible contact areas (zinc-plated mounting plates).
5. Avoid conductor loops that act like antennas, especially loops that encompass large areas.
   - Avoid unnecessary conductor loops.
   - Avoid parallel arrangement of low-level signal wiring and power-carrying or noise-prone conductors.
6. Use shielded wiring for the motor cable and all analog and digital control lines.
   - Allow the effective shield area of these lines to remain as large as possible; i.e., do not strip away the shield (screen) further away from the cable end than absolutely necessary.
   - With integrated systems (for example, when the adjustable frequency inverter

is communicating with some type of supervisory controller or host computer in the same control cabinet and they are connected at the same ground + PE-potential), connect the shields of the control lines to ground + PE (protective earth) at both ends. With distributed systems (for example the communicating supervisory controller or host computer is not in the same control cabinet and there is a distance between the systems), we recommend connecting the shield of the control lines only at the end connecting to the adjustable frequency inverter. If possible, route the other end of the control lines directly to the cable entry section of the supervisory controller or host computer. The shield conductor of the motor cables always must connected to ground + PE at both ends.

- To achieve a large area contact between shield and ground + PE-potential, use a PG screw with a metallic shell, or use a metallic mounting clip.
- Use only cable with braided, tinned copper mesh shield (type "CY") with 85% coverage.
- The shielding continuity should not be broken at any point in the cable. If the use of reactors, contactors, terminals, or safety switches in the motor output is necessary, the unshielded section should be kept as short as possible.
- Some motors have a rubber gasket between terminal box and motor housing. Very often, the terminal boxes, and particularly the threads for the metal PG screw connections, are painted. Make sure there is always a good metallic connection between the shielding of the motor cable, the metal PG screw connection, the terminal box, and the motor housing. If necessary, carefully remove paint between conducting surfaces.

7. Take measures to minimize interference that is frequently coupled in through installation cables.
   - Separate interfering cables with 0.25m minimum from cables susceptible to interference. A particularly critical point is laying parallel cables over longer distances. If two cables intersect (one crosses over the other), the interference is smallest if they intersect at an angle of 90°. Cables susceptible to interference should therefore only intersect motor cables, intermediate circuit cables, or the wiring of a rheostat at right angles and never be laid parallel to them over longer distances.
8. Minimize the distance between an interference source and an interference sink (interference- threatened device), thereby decreasing the effect of the emitted interference on the interference sink.
   - You should use only interference-free devices and maintain a minimum distance of 0.25 m from the adjustable frequency inverter.
9. Follow safety measures in the filter installation.
   - If using external EMC filter, ensure that the ground terminal (PE) of the filter is properly connected to the ground terminal of the adjustable frequency inverter. An HF ground connection via metal contact between the housings of the filter and the adjustable frequency inverter, or solely via cable shield, is not permitted as a protective conductor connection. The filter must be solidly and permanently connected with the ground potential so as to preclude the danger of electric shock upon touching the filter if a fault occurs.

To achieve a protective ground connection for the filter:

- Ground the filter with a conductor of at least 10 mm^2 cross-sectional area.
- Connect a second grounding conductor, using a separate grounding terminal parallel to the protective conductor. (The cross section of each single protective conductor terminal must be sized for the required nominal load.)

Installation for X2002 series (example of SFEF2 models)

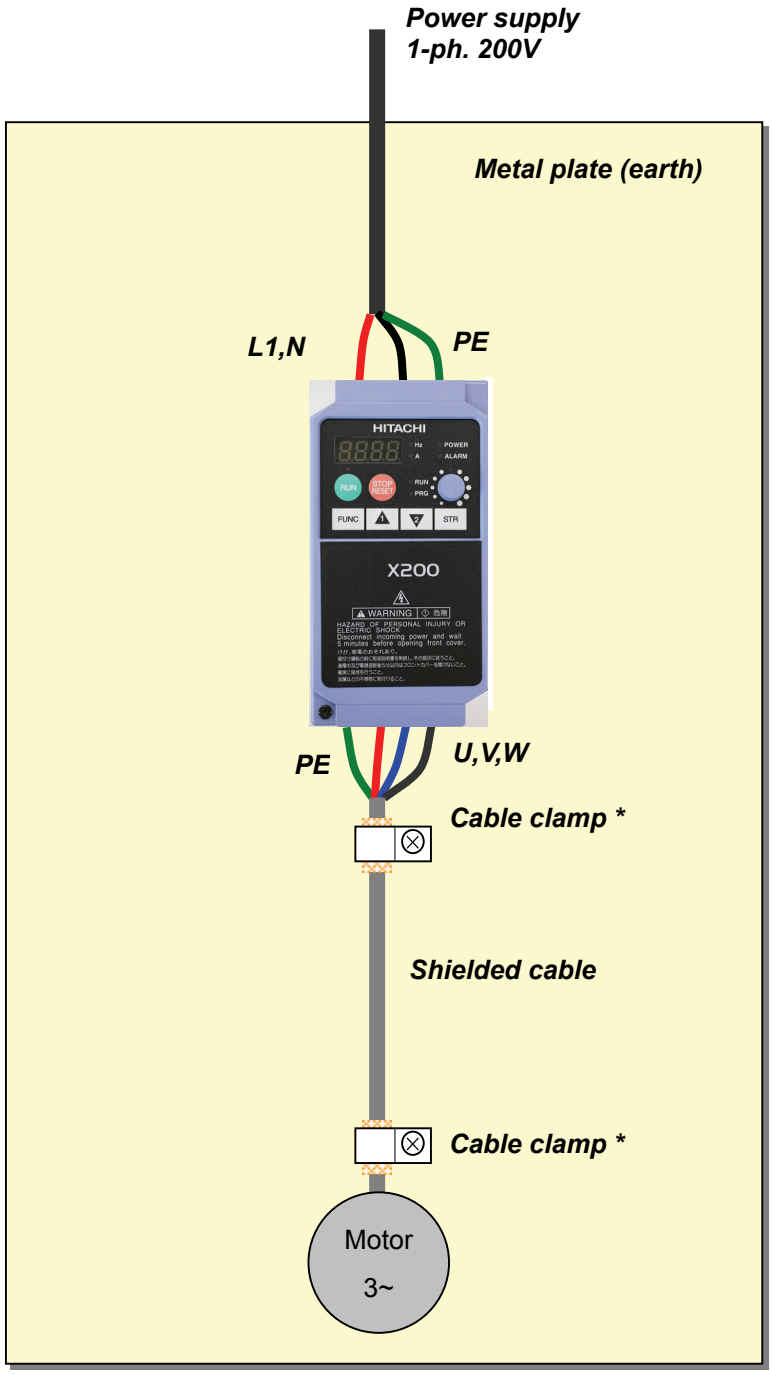

*) Both earth portions of the shielded cable must be connected to the earth point by cable clamps.

Input choke is necessary for CE marking (IEC 61000-3-2 and IEC61000-3-4) from the harmonic current point of view, even conducted emission and radiated emission passed without the input choke.

Hitachi EMC Recommendations

WARNING: This equipment should be installed, adjusted, and serviced by qualified personal familiar with construction and operation of the equipment and the hazards involved. Failure to observe this precaution could result in bodily injury.

Use the following checklist to ensure the inverter is within proper operating ranges and conditions.

1. The power supply to X200₂ inverters must meet these specifications:
   - Voltage fluctuation ±10% or less
   - Voltage imbalance ±3% or less
   - Frequency variation ±4% or less
   - Voltage distortion THD = 10% or less
2. Installation measure:
   - Use a filter designed for X200₂ inverter in case external EMC filter is needed. Refer to the instruction of the applicable external EMC filter.
3. Wiring:
   - Shielded wire (screened cable) is required for motor wiring, and the length must be less than 5 meter for SFEF2 models and HFEF2 models.
   - If the motor cable length exceeds the value shown above, use output choke to avoid unexpected problem due to the leakage current from the motor cable.
   - The carrier frequency setting must be 3 kHz or less to satisfy EMC requirements.
   - Separate the power input and motor wiring from the signal/process circuit wiring.
4. Environmental conditions—when using a filter, follow these guidelines:
   - Ambient temperature: –10 to 40 °C
   - Humidity: 20 to 90% RH (non-condensing)
   - Vibration: 5.9 m/sec2 (0.6 G) 10 ~ 55Hz
   - Location: 1000 meters or less altitude, indoors (no corrosive gas or dust)

CALL NOW 800-985-6929 http://www.automatedpt.com Email: charles@

Index

A

A Group functions 3–10
AC reactors 5–3
Acceleration 1–23, 3–9
    characteristic curves 3–27
    second function 3–25
    two-stage 4–17
Access levels 3–5, 3–36, 4–21
Accessories 5–2
ADD frequency 3–30
    enable input 4–30
Alarm signal 4–37, 4–44
Algorithms, torque control 3–5, 3–65
Ambient temperature 2–10, A–2
Analog inputs
    calibration settings 3–61
    current/voltage select 4–22
    disconnect detect 4–46
    operation 4–55
    settings 3–13, 3–28
    wiring examples 4–53
Analog outputs
    configuration 3–56
    operation 4–57
Arrival frequency A–2
Automatic restart 3–32
Automatic voltage regulation 2–32, 3–23

B

B Group functions 3–32
Base frequency 2–31, A–2
    setting 3–12
Bibliography A–8
Braking 1–22
    dynamic 5–5
    settings 3–18
Braking resistor 5–5, A–2
Braking unit 5–5
Break-away torque A–2

C

C Group functions 3–49
Calculate function 3–29
Capacitor life curve 6–11
Carrier frequency 3–40, A–2
Catching a spinning motor 3–42
Cautions
    general x
    index to... iv
    inverter mounting 2–9
    operating procedures 4–2
CE approval A–2
CE-EMC guidelines D–2
Chassis ground connection 1–25, 2–23

CALL NOW 800-985-6929 http://www.automatedpt.com Email: charles@automatedpt.com

CALL NOW 800-985-6929 http://www.automatedpt.com Email: charles@automatedpt.com

Choke 2–7, 5–3, A–2
Chopper frequency 3–40
Circuit breaker sizes xv
Clearance for ventilation 2–10
Coasting 3–42
Connectors
    logic terminals 2–4
    removal 2–5
    serial port 2–4, B–3
Constant torque 3–16
Constant volts/hertz operation 1–20
Contact information xix
Control algorithms 3–16
Copy unit 1–3, 3–2
Cover removal 2–3
Current input 3–13
Current overload 2–32, 3–34
Current/voltage analog input select 4–22

D

D Group parameters 3–6
DC braking 3–18, 4–15, A–3
DC Bus AVR 3–46
Deadband A–3
Deceleration 1–23, 3–9
    characteristic curves 3–27
    second function 3–25
    two-stage 4–17
Default settings
    listing C–2
    restoring 6–8
Delay function, output circuits 3–64, 4–38
Derivative gain 3–22
Digital operator 1–3, 2–26, 3–3, A–3
Dimensions
    inverter 2–11
    terminals 2–20
Diode A–3
DIP switch configuration 2–5, B–4
Disconnect detect, analog input 4–46
Duty cycle A–3
Dynamic braking 1–22, 5–5, A–3

E

Editing parameters 2–26, 2–29
    in Run Mode 3–5, 3–36, 4–21
Electromagnetic compatibility D–2
Electronic thermal overload xv
    configuration 3–34
EMC installation
    guidelines D–2
    recommendations D–5
EMI A–3
EMI filter xii, 5–4
Environmental specs 1–10
Error codes, trip events 6–5
Error, PID loop 4–43, A–3
Event clearing 4–26
External trip 4–19

F

F Group functions 3–9
Factory default settings 3–40
    restoring 6–8
Fan control 3–44
Fan outlet 2–10
FAQ 1–24
Features 1–2, 2–2
Filters, noise suppression 5–2
Fine-tuning functions 3–32
Force operation from digital operator 4–29
Force terminal mode 4–31
Forward run command 4–11
Four-quadrant operation A–3
Free-run stop 3–42, 4–18, A–4
Frequency arrival signals 4–40
Frequency display scaling 3–40
Frequency limits 3–20
Frequency pull in resume 3–42
Frequency setting A–4
Frequency source setting 3–10
Frequency-related functions 3–20
Frequently asked questions 1–24
Functions 1–22, 2–29
Fuse sizes xv, 2–19

CALL NOW 800-985-6929 http://www.automatedpt.com Email: charles@automatedpt.com

CALL NOW 800-985-6929 http://www.automatedpt.com Email: charles@

G

Glossary of terms A–2

H

H Group parameters 3–65
Harmonics A–4
History of trip events 3–7
Horsepower A–4

I

IGBT 1–19, A–4
    test method 6–15
Inertia A–4
Initialization 6–8
    codes 3–40
Input circuits 4–4, 4–8
Inspection
    electrical measurements 6–12
IGBT test method 6–15
    measurement techniques 6–14
    procedures 6–9
    unpacking 2–2
Installation instructions 2–8
Insulation test 6–10
Integral gain 3–22
Intelligent input terminals 3–49, 4–8
Intelligent output terminals 3–54, 4–34
Intelligent terminals
    definition A–4
    functions 3–49
    index 4–7
Inverter 1–19, A–4
    dimensions 2–11
    specifications 1–5
Isolation transformer A–4

J

Jog command 4–14
Jog frequency settings 3–15
Jogging operation A–5
Jump frequencies 3–21, A–5

K

Keypad 1–3, 2–2, 3–2
    features 2–26, 3–3
    navigation 2–28, 3–4
    navigation, trip events 6–5
    removal and installation 2–3

L

LEDs 2–26, 2–27, 3–3
Line reactor A–5
Linear accel/decel 3–27
Logic output function 3–54, 4–52
Logic terminals 2–4, 3–49, 4–6

M

Main profile parameters 3–9
Maintenance procedures 6–9
Manual torque boost 3–16
Maximum frequency setting 3–12
Megger test 6–10
ModBus
    data listing B–19
    introduction to network B–2
Model number
    convention 1–4
    on nameplate 1–4
Momentum A–5
Monitor mode 2–27, 3–4, 3–5, 6–5
Monitoring functions 3–6
Motor
    constants 3–65
    load A–5
    poles 1–25, 2–33, 3–65
    speed 2–35
    voltage selection 3–65
    wiring 2–23
Mounting
    clearance for ventilation 2–10
    dimensions 2–11
    location 2–9
Multiple motors, configuration 4–60
Multi-speed
    operation 4–12, A–5
    profiles 1–23
    settings 3–15

CALL NOW 800-985-6929 http://www.automatedpt.com Email: charles@automatedpt.com

CALL NOW 800-985-6929 http://www.automatedpt.com Email: charles@automatedpt.com

N

Nameplate 1–4
Navigational map 2–28, 3–4
    trip events 6–7
NEC A–5
NEMA
    definition A–5
    rated installation 1–3
Network communications 1–24, 2–5, B–2
    detection signal 4–50
    error code 6–6
    ModBus data listing B–19
    parameter settings B–5
    protocol reference B–6
    termination resistor B–4
Noise filters 5–2
Non stop operation at power OFF 3–38
AC reactor 2–7

O

OPE/485 serial port configuration 2–5, B–4
Open-collector outputs 4–36, A–5
Operational modes 3–5
Operator interfaces 1–3
Optional components 1–2, 2–7
Orientation 2–2
Output circuits 4–4, 4–36
    delay function 3–64, 4–38
Output deviation for PID control 4–43
Output frequency 2–34
    setting 3–9
Output function adjustment parameters 3–58
Output overload 3–34
Output terminals 2–23
Over-current trip 3–32
Overload advance notice signal 4–42
Overload protection xv
    configuration 3–34
    error code 6–5
Overload restriction 3–35
Override, source settings 3–11
Over-voltage trip 3–32
    error code 6–5, 6–6

P

Parameter editing 2–26, 2–29
Parameter settings 1–22, 2–27
    listings C–2
PID loop 1–26
    clear input 4–26
    configuration 4–58
    definition A–5
    error 4–43, A–3
    error inversion 4–59
    ON/OFF input 4–26
    operation 4–58
    output limit 4–59
    process variable, definition A–6
    second stage output 4–47
    settings 3–22
PLC, connecting to 4–4
Poles of motor 1–25, 2–33, 3–65
Potentiometer 2–29, 3–10, 4–55
Power factor A–5
Power fail 3–32
Powerup Test 2–24
    observations 2–35
Powerup, unattended start 4–20
    error code 6–6
Preventative maintenance 6–9
Process variable A–6
Program mode 2–27, 2–34, 3–4, 3–5
Programming device 3–2
Proportional gain 3–22
PV source setting 3–22
PWM A–6

Q

Quick start enable 4–31

CALL NOW 800-985-6929 http://www.automatedpt.com Email: charles@automatedpt.com

CALL NOW 800-985-6929 http://www.automatedpt.com Email: charles@automatedpt.com

R

Ratings label 1–4
Reactance A–6
Read/write copy unit 1–3
Rectifier A–6
Reduced torque 3–16
Regenerative braking A–6
Regulation A–6
Regulatory agency approvals 1–4
Relay
    alarm signal contacts 4–44
    as intelligent output 4–37
Remote control 4–27
Reset function 3–62, 4–23
Restart Mode configuration 3–42
Reverse run command 4–11
Reverse torque A–6
Revision history xviii
RF noise filter 5–4
RJ-45 modular connector 2–4, B–3
Rotor A–6
RPM 2–35
Run command 4–11
Run command source setting 2–30, 3–10, 4–29, 4-31
Run mode 2–34, 3–5
Run signal 4–37
Running the motor 2–34
Run-time edits 3–5, 3–36, 4–21

S

Safe stop 4–32
Safety messages i
Saturation voltage A–6
Scaling 3–40
S-curve accel/decel 3–27
Second accel and decel 3–25
Second motor 4–16
Second stage output 4–47
Sensorless vector control A-6
Serial port B–3
Service, warranty 6–16
Set 2nd motor 4–16, 4–60
Setpoint A–7
Single-phase power A–7
Sink/source input configuration 4–8
Slip
    definition A–7
Software lock 3–5, 3–36, 4–21
Source/sink input configuration 4–8
Spare parts 6–11
Specifications
    control logic signals 1–11, 4–6
    general 1–10
    inverter 1–5
    inverter label 1–4
Speed control 1–19, 1–23, 4–12
Speed pot 2–26
Squirrel cage A–7
Standard functions 3–10
Start frequency 3–40
Stator A–7
Stop command 4–11
Stop Mode configuration 3–42
Supply wiring 2–19
Switches, configuration 2–5
Switching frequency 3–40
Symbol definitions i
System description 2–7

CALL NOW 800-985-6929 http://www.automatedpt.com Email: charles@automatedpt.com

CALL NOW 800-985-6929 http://www.automatedpt.com Email: charles@automatedpt.com

T

Tachometer A–7
Technical support xix
Term definitions A–2
Terminal/program source configuration 2–30, 3–10
Terminals
    arrangement 2–21
    listing 4–7
    torque specs xiv, 2–20
Termination resistor, network B–4
Thermal protection
    inverter, error code 6–6
    motor 4–24
Thermal switch A–7
Thermistor
    definition A–7
    error code 6–6
    input terminal 4–24
Three-phase power
    definition A–7
    motor phase connections 1–19
    wiring precautions 2–18
Three-wire interface operation 4–25
Torque 1–20, A–8
Torque boost 3–16
Torque control algorithms 3–5, 3–16, 3–65
Torque specs, terminals xiv, 2–20
Transistor A–8
Trip events 3–7, 4–23
    clearing 6–5
    definition A–8
    error codes 6–5
    external input 4–19
    history of 6–7
    monitoring 6–5
Troubleshooting tips 6–3
Two-stage accel/decel 4–17

U

UL instructions xiii
Unattended start protection 4–20
    error code 6–6
Under-voltage trip 3–32
    error code 6–5, 6–6
Unpacking 2–2
Up/Down functions 4–27

V

V/f control 3–16
Variable torque 3–16
Variable-frequency drives
    introduction 1–19
Velocity profile 1–23
Ventilation 2–10, 2–24
Voltage gain 3–17
Voltage input 3–13

W

Warnings
    general x
    index to... iv
    operating procedures 4–3
    troubleshooting 6–2
Warranty 6–16
Watt loss A–8
Wiring
    access 2–6
    analog inputs 4–55
    gauge xiv, 2–19
    inverter output 2–23
    logic connectors 2–23, 4–6
    power input 2–20
    preparation 2–18
    relay contacts 4–6
    system diagram 4–5

Z

Zero-phase reactor 5–4

CALL NOW 800-985-6929 http://www.automatedpt.com Email: charles@automatedpt.com